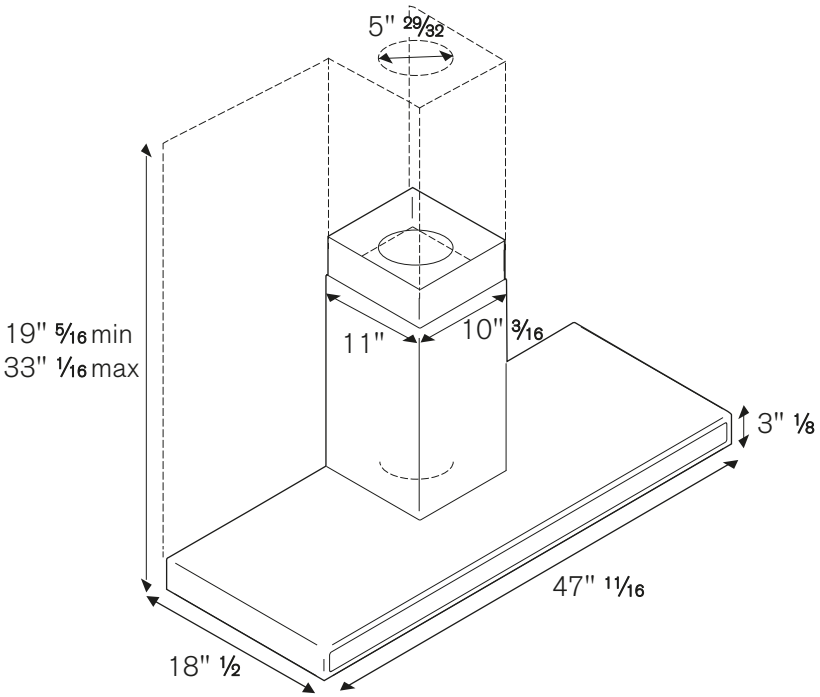
5" 29/32
19" 5/16 min
33" 1/16 max
11"
10" 3/16
3" 1/8
47" 11/16
18" 1/2

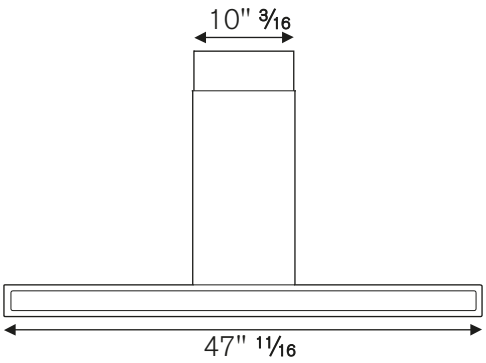
10" 3/16
47" 11/16

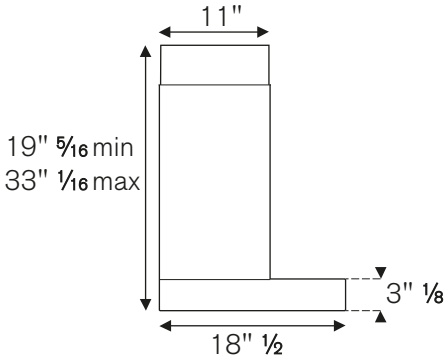
11"
19" 5/16 min
33" 1/16 max
3" 1/8
18" 1/2