ULPT-M product information sheet

Product Specifications

Fits most: 23" - 42" flat panels
Supports up to: 125 lbs (56.7 kg)
Tilt: 0 to +15º
Mounting profile: 1.5" (37mm)
Universal & VESA compliant: 100x200, 200x200, 200x300, 200x400, 300x300, 300x400, 400x400
Mounting: Double-stud
Color: Black

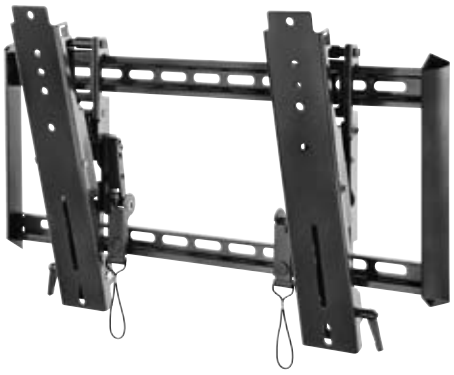

Product Benefits

- Ultra low profile design
- Tilts up to 15° to reduce glare
- Innovative built-in kickstand makes wiring your panel convenient
- Universal rails for greater panel compatibility
- Tension adjustment for variable tilt
- Sliding lateral on-wall adjustment
- Open architecture provides easy access to in-wall wiring
- Lift n' Lock™ allows you to easily attach your flat panel to the mount
- Locking system secures panel to mount
- Wall plate covers conceal mounting hardware
- Extruded aluminum end caps present a clean side view
- Includes installation template and complete hardware kit

The ULPT-M is designed with an innovative built-in kickstand which allows one person to wire the panel with no vertical lifting

Series

ULPT-M

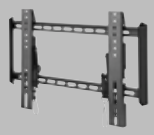

ULPF-M

ULPT-L

ULPF-L

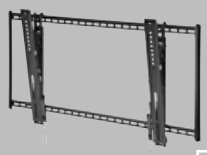

ULPT-X

ULPF-X

OmniMount, an innovator of A/V mounts and furniture for more than a quarter century, is the choice of professional installers and the brand most recommended by flat panel manufacturers. The Ultra Low Profile Series offers a sleek and slim design without compromising functionality. The ULPT-M supports 23"- 42" flat panels and has a slim 1.5" mounting profile making it an ideal tilt mounting solution when seamless integration counts most.

ULPT-M technical data sheet

OmniMount, an innovator of A/V mounts and furniture for more than a quarter century, is the choice of professional installers and the brand most recommended by flat panel manufacturers. The Ultra Low Profile Series offers a sleek and slim design without compromising functionality. The ULPT-M supports 23"- 42" flat panels and has a slim 1.5" mounting profile making it an ideal tilt mounting solution when seamless integration counts most.

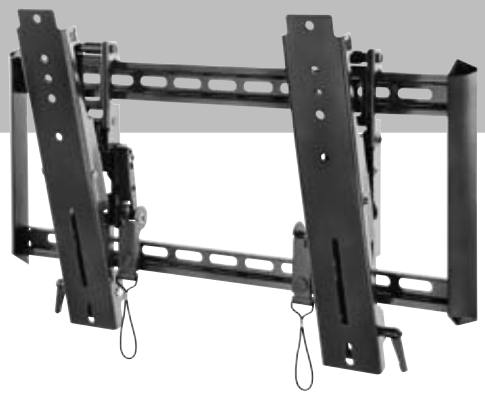

Product Specifications

Fits most: 23" - 42" flat panels
Supports up to: 125 lbs (56.7 kg)
Tilt: 0 to +15º
Mounting profile: 1.5" (37mm)
Universal & VESA compliant: 100x200, 200x200, 200x300, 200x400, 300x300, 300x400, 400x400
Mounting: Double-stud
Color: Black

Product Benefits

- Ultra low profile design
- Tilts up to 15° to reduce glare
- Innovative built-in kickstand makes wiring your panel convenient
- Universal rails for greater panel compatibility
- Tension adjustment for variable tilt
- Sliding lateral on-wall adjustment
- Open architecture provides easy access to in-wall wiring
- Lift n' Lock™ allows you to easily attach your flat panel to the mount
- Locking system secures panel to mount
- Wall plate covers conceal mounting hardware
- Extruded aluminum end caps present a clean side view
- Includes installation template and complete hardware kit

	Stock Code	Packaging UPC	MC UPC
Americas	1003465-1	728901019517	728901712913
International	1003465EU-1	728901019593	728901712999

	Dimensions WxDxH Inches (mm)	Wt lbs (kg)
Product Box	13.4 x 26.4 x 3.4 (340x670x87)	18.3 (8.3)
Master Carton	14 x 27 x 7.5 (356x686x191)	37 (16.8)

Box Contents	Qty
Wall plate	1
Vertical tilt rail with kickstand	2
Security clip	2
Bottom rail cover	1
Top rail cover	1

Box Contents	Qty
Complete mount installation hardware kit	1
Complete panel attachment hardware kit	1
Installation template	1
Instruction manual	1
Flat panel compatibility guide	1

ULPT-M line drawing

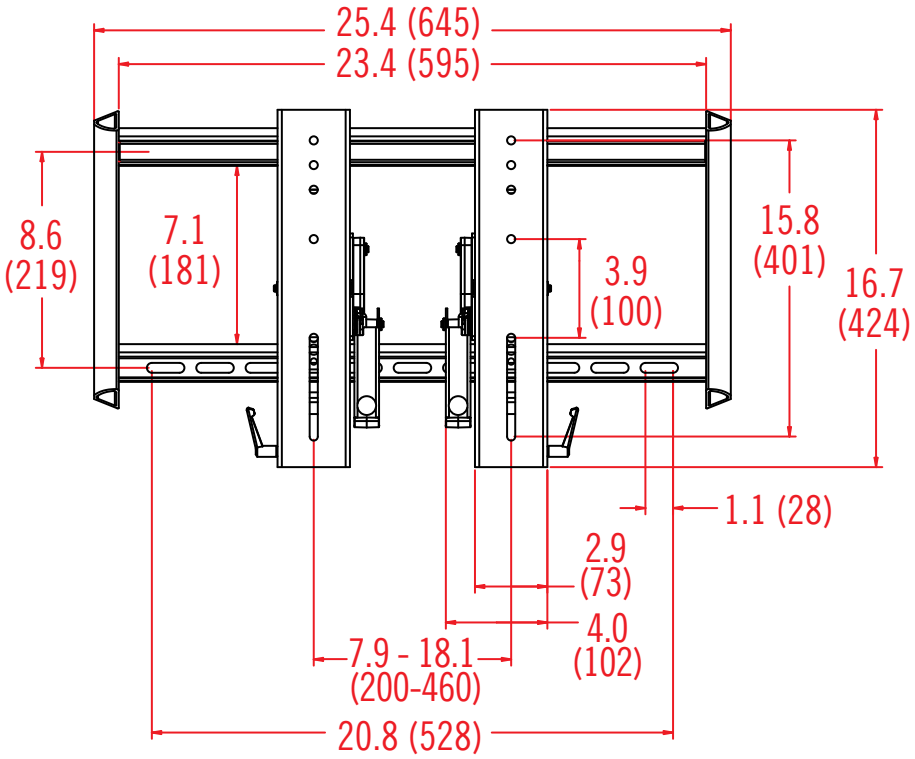

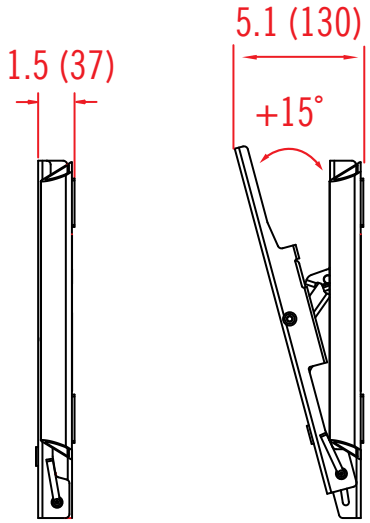

inches (mm)