Freestanding Electric Range

Cabinetry by KraftMaid.® Tile and floor by Mannington Mills, Inc.

Architect® Series II

KERS205T

Revitalize your culinary senses. **T.H.E.™ True Convection** circulates air throughout the oven for optimal, even cooking results, while the **auto convect conversion system** takes the guesswork out of convection cooking when experimenting with new or familiar recipes.

Stainless Steel
KERS205TSS

KitchenAid®
FOR THE WAY IT'S MADE.®

Freestanding Electric Range

Five-Element Cooktop

Five versatile cooktop elements provide cooking flexibility and allow elements to be selected based on the size of cookware.

KERS205T – 30-Inch

- T.H.E.™ True Convection
- Auto Convect Conversion System
- Triple-Ring Element
- Double-Ring Element
- Two 6" Elements
- Warming Zone
- Storage Drawer
- Self-Cleaning System with Soil Level/Time Selection
- Rapid Preheat
- Bread Proofing
- Variable Broil
- Dehydration
- Sabbath Mode
- Cook & Hold
- Keep Warm Option
- Favorites
- Hot-Surface Indicators
- 5.3 Cu. Ft. Oven Capacity
- Stainless Steel (SS)

PRODUCT DIMENSIONS

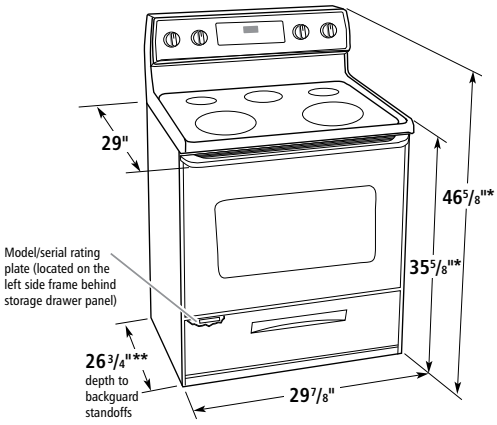

*Range can be raised approximately 1" by adjusting the leveling legs.

**When installed in a 24" base cabinet with 25" countertop; front of oven door protrudes 2 3/4" beyond 24" base cabinet.

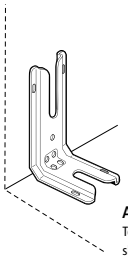

Anti-tip bracket:
To install the anti-tip bracket shipped with the range, see Installation Instructions.

CUTOUT DIMENSIONS

Cabinet opening dimensions shown are for 25" countertop depth, 24" base cabinet depth, and 36" countertop height.

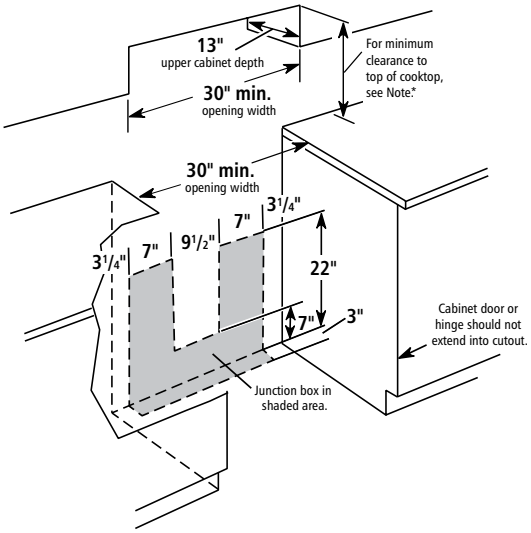

***Note:** 24" minimum when bottom of wood or metal cabinet is protected by not less than 1/4" flame retardant millboard covered with not less than No. 28 MSG sheet steel, 0.015" stainless steel, 0.024" aluminum or 0.020" copper.

30" minimum clearance between the top of the cooking platform and the bottom of an unprotected wood or metal cabinet.

If installing a hood or microwave hood combination oven above the range, follow hood or microwave hood combination oven installation instructions for dimensional clearances above the cooktop surface.

PERFORMANCE PARTNER

KHMS1850S

Microwave Hood Combination Oven

Dimensions are for planning purposes only. For complete details, see Installation Instructions packed with product. Specifications subject to change without notice.

KitchenAid®
FOR THE WAY IT'S MADE.®

For Additional Information About KitchenAid® Appliances

Visit KitchenAid.com or call the Customer Experience Center 1-800-422-1230.

®Registered trademark/™Trademark of KitchenAid, U.S.A.
©2008. All rights reserved.

KitchenAid • Benton Harbor, Michigan 49022 U.S.A (28204RC0308)
03/08 ®KraftMaid is a registered trademark of Masco Corporation. Printed in U.S.A.