# G304

## 4 SHELF A/V TOWER

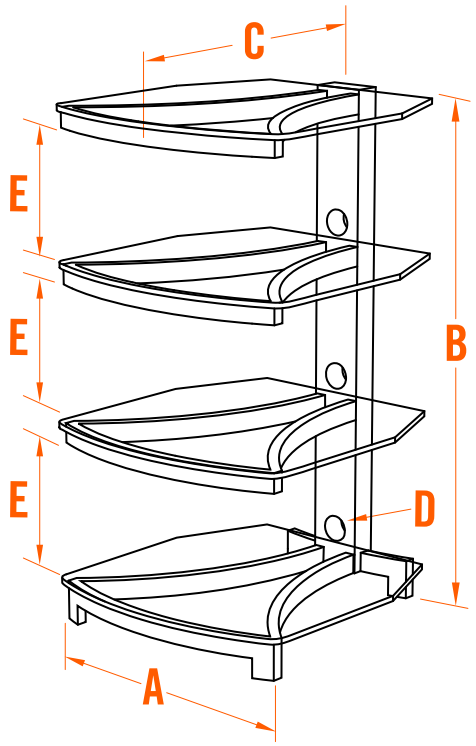


TECHNICAL SPECIFICATIONS

| | | |
|---|---|---|
| A | 20.75” | 52.70 cm |
| B | 39.75” | 101.00 cm |
| C1 | 21.60” | 55.00 cm |
| D | 2.00” | 5.00 cm |
| E | 10.00” | 25.40 cm |

Four shelf audio/video tower

- Unique floating shelf design
- Integrated cable management
- 50 lbs. (22.7 kg) top shelf capacity
- 90 lbs (40.8 kg) shipping weight
- Available in Grey, Black, High-gloss Black