Hardware included

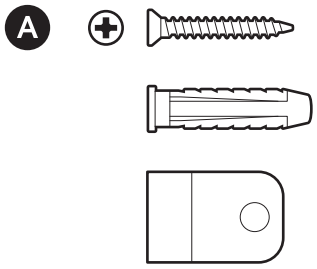

Tools needed

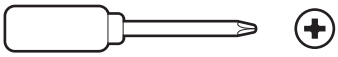

Phillips-head screwdriver

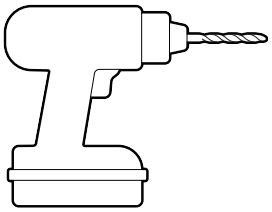

Drill with 1/4 in (6 mm) masonry bit (optional)

1.

Download the Ring Always Home app.



2.

Scan the QR code on your device.

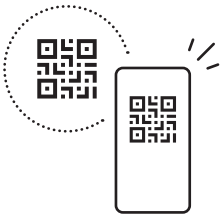

3.

Choose a location.

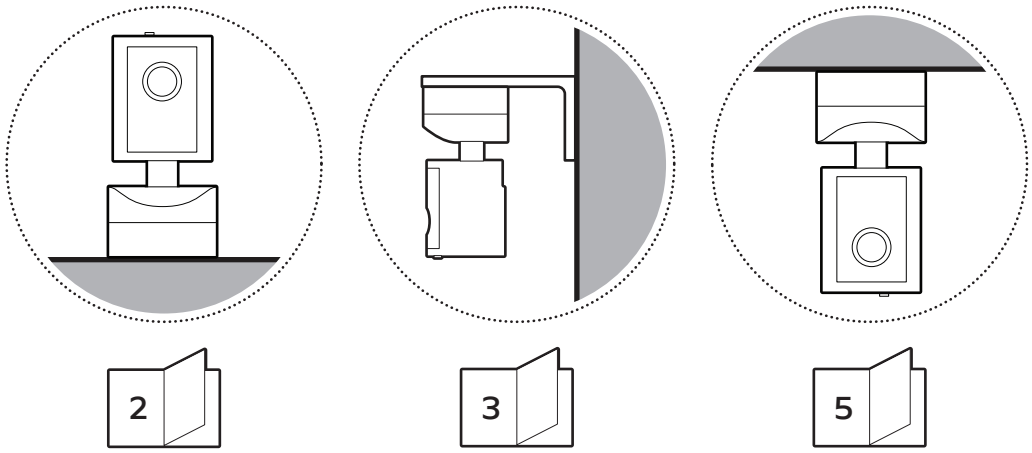

On a table or shelf

1.

Place your camera on a level surface with 6.5 in (16.5 cm) of space in every direction and plug in.

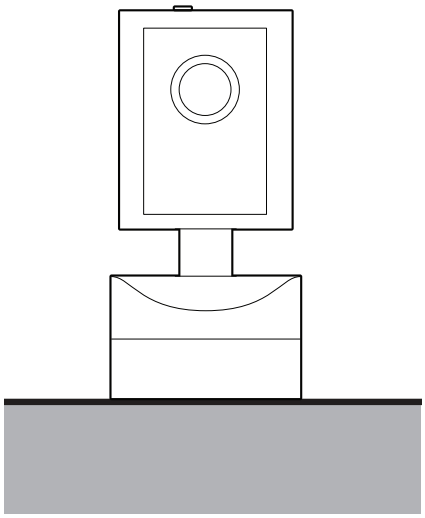

2.

Plug the power supply into an outlet and wait for your camera to turn on.

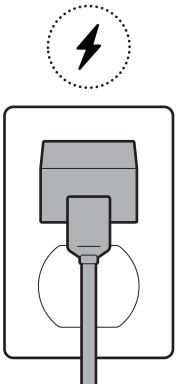

On a wall

1.

Hold the mounting plate against the surface, and mark screw holes.

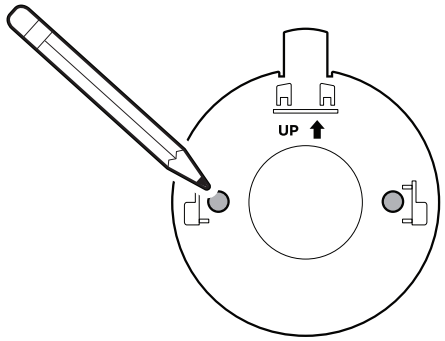

On stucco, brick, or concrete, use a 3/16 in (5 mm) masonry bit to drill holes for the included wall anchors.

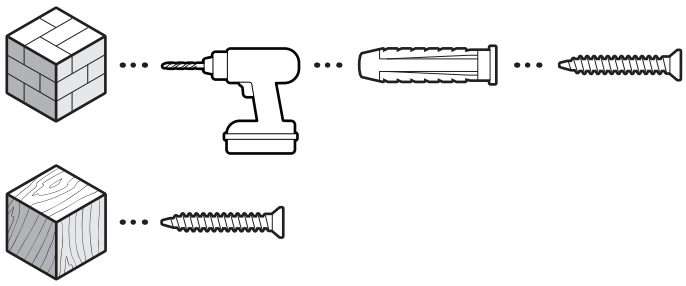

2.

Install the mounting plate with the UP arrow pointing up.

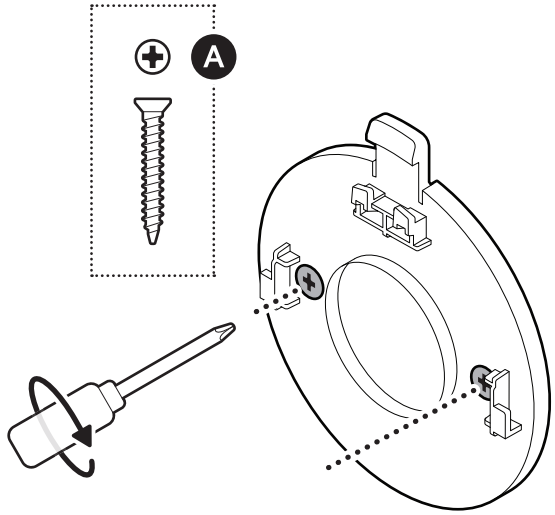

3.

Run the power cable through the hole in the mounting bracket without connecting it to your camera.

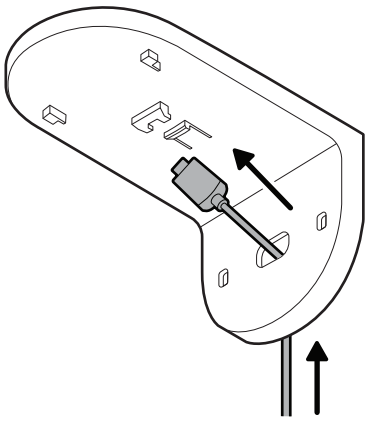

4.

Secure your camera to the mounting bracket by sliding until you feel a click.

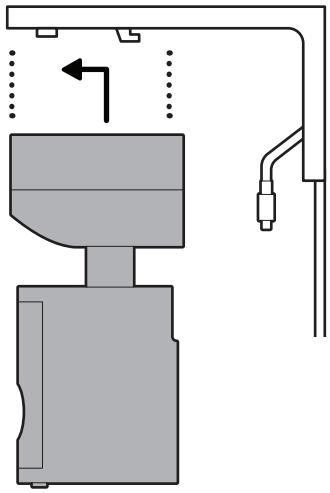

5.

Secure your camera and bracket to the mounting plate by sliding until you feel a click.

NOTE: When securing your camera and bracket, ensure your camera is upside down for maximum visibility.

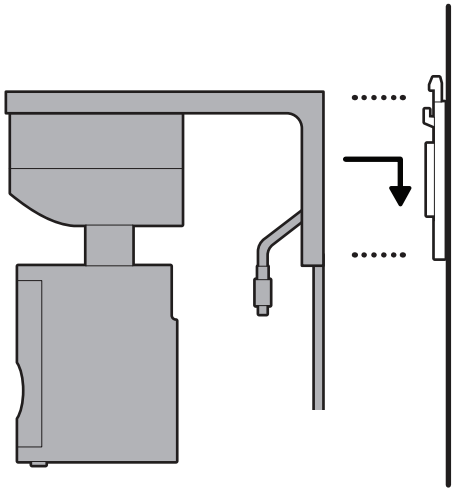

6.

Connect the power cable into the port on the back of your camera.

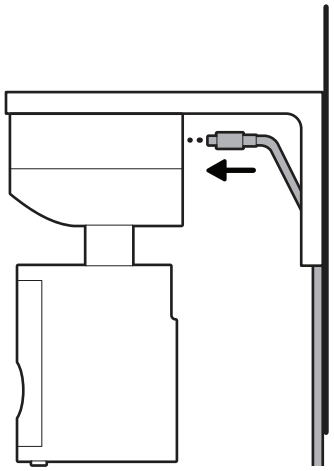

7.

Anchor the power cable with the included cable clip.

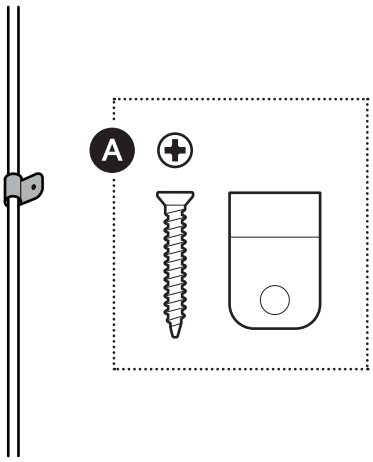

8.

Plug the power supply into an outlet and wait for your camera to turn on.

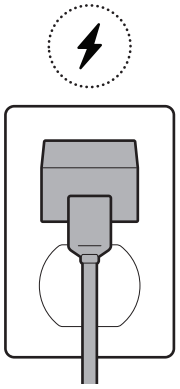

On a ceiling

1.

Hold the mounting plate against the surface, and mark screw holes with 6.5 in (16.5 cm) of space in every direction.

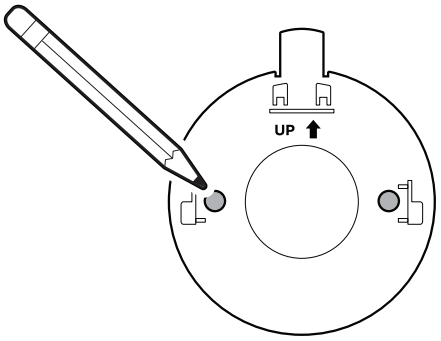

2.

Install the mounting plate with the UP arrow pointing opposite to your desired viewing direction.

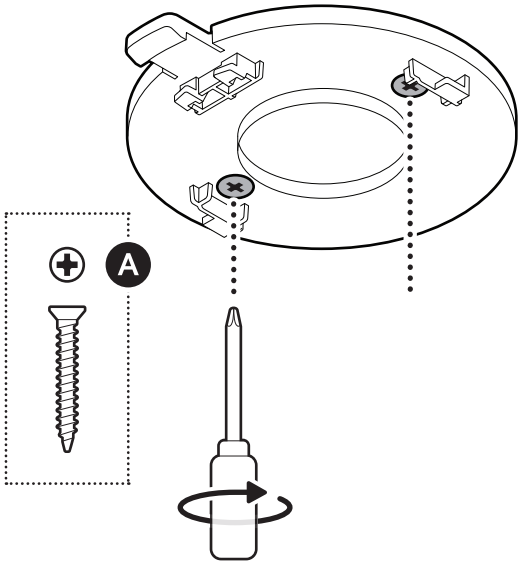

On stucco, brick, or concrete, use a 3/16 in (5 mm) masonry bit to drill holes for the included wall anchors.

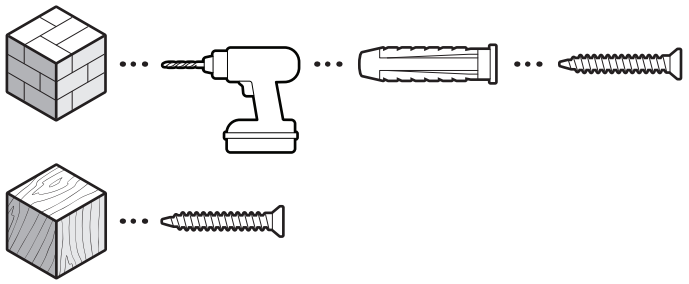

3.

Slot your camera onto its mounting plate.

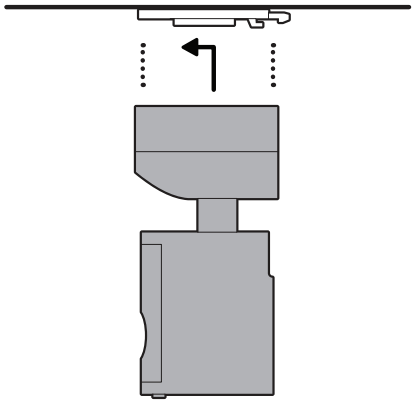

4.

Connect the included cable to the port on the back of your camera.

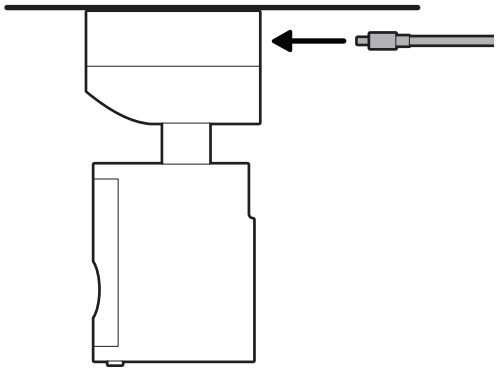

5.

Plug the power supply into an outlet and wait for your camera to turn on.

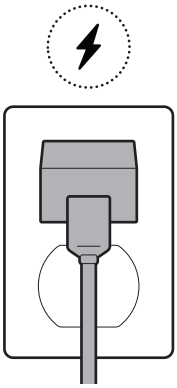

6.

Anchor the power cable to the wall or ceiling with the included cable clip.

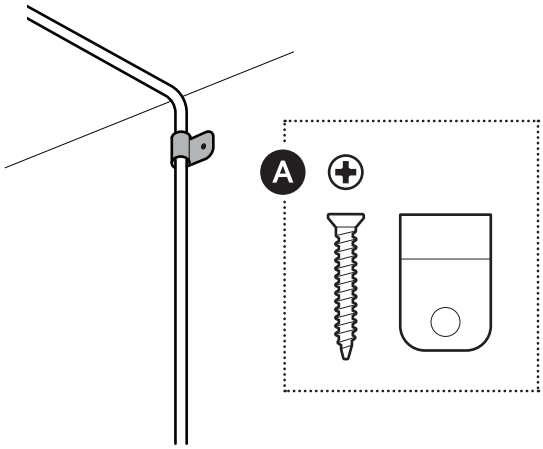

Using the privacy shutter

1.

To open the privacy shutter, slide the switch on top of your camera to the left.

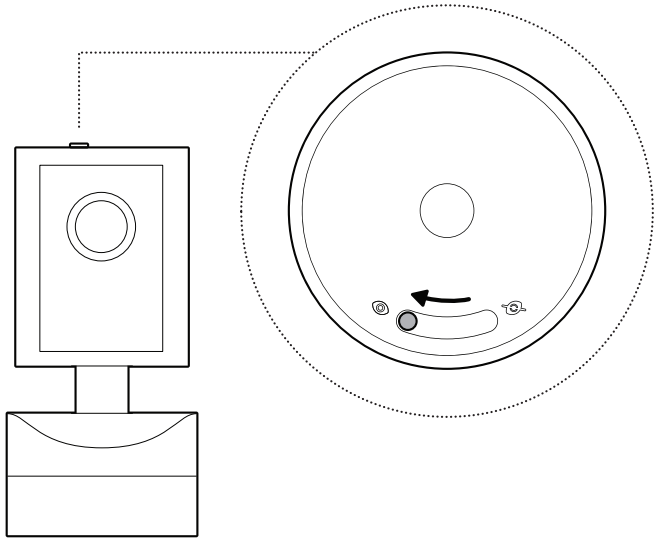

2.

To close the privacy shutter, slide the switch on top of your camera to the right until you see a red circle over the lens.

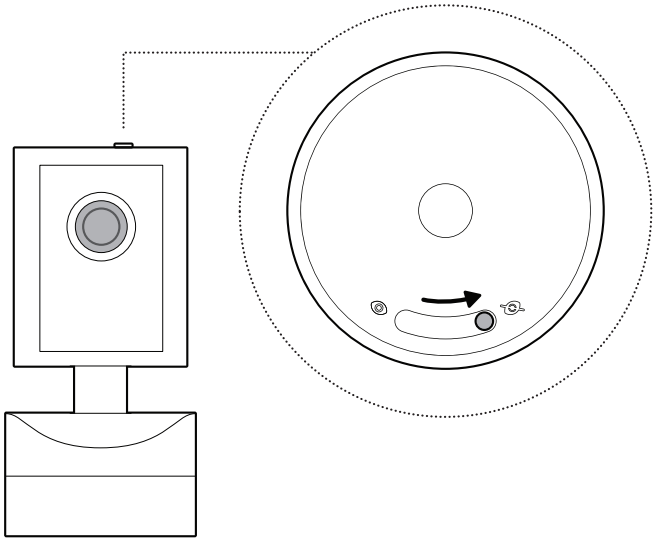

ring.com/contact

ring.com/help

Ring LLC 12515 Cerise Ave, Hawthorne, CA, 90250 USA

Ring LLC / Amazon EU S.à.r.l., 38 Avenue John F. Kennedy, L-1855 Luxembourg / Amazon UK, 1 Principal Place, Worship Street, London, EC2A 2FA, United Kingdom

アマゾンジャパン合同会社〒153-0064 東京都目黒区下目黒1-8-1

Ring LLC مبني 12515 طريق سيريس، هاوثورن، كاليفورنيا، 90250، الولايات المتحدة الأمريكية

©2026 Ring LLC or its affiliates. Ring and all related marks are trademarks of Ring LLC or its affiliates.

©2026 Ring LLC又はその関連会社。Ring及びこれらに関するすべての商標は、Ring LLC又はその関連会社の商標です。