Hardware included

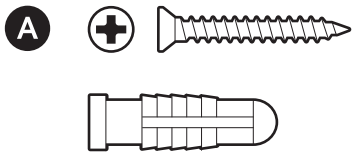

Tools needed

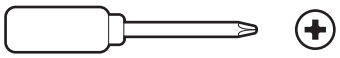

Phillips-head screwdriver

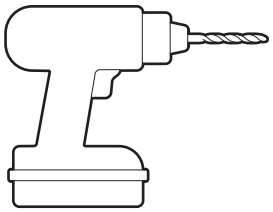

Drill with 3/16 in (5 mm) masonry bit (optional)

1.

Download the Ring Always Home app.



2.

Scan the QR code on your device.

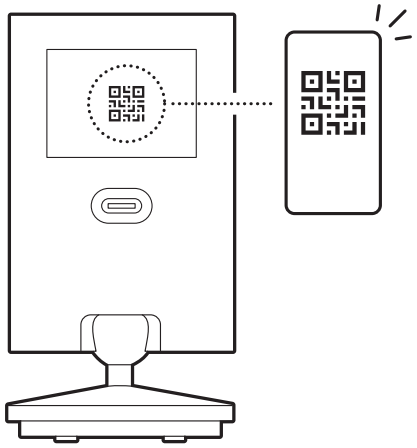

3.

Choose a location.

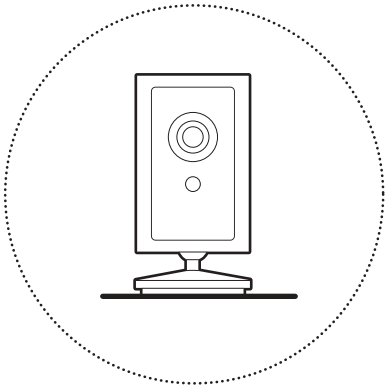

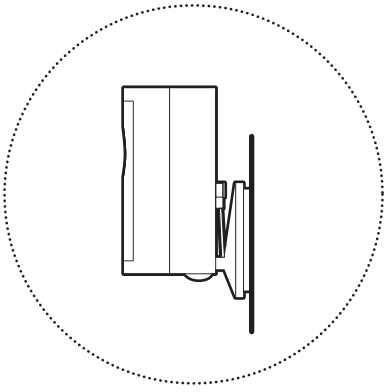

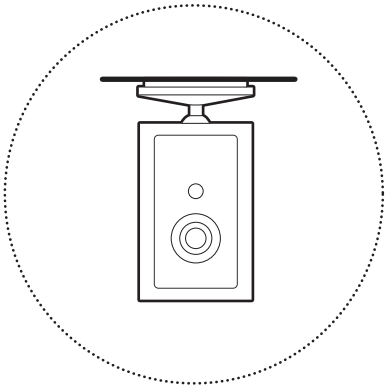

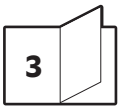

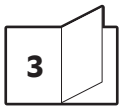

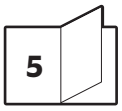

On a table or shelf

1.

Connect the included cable to your camera, then plug it into an outlet.

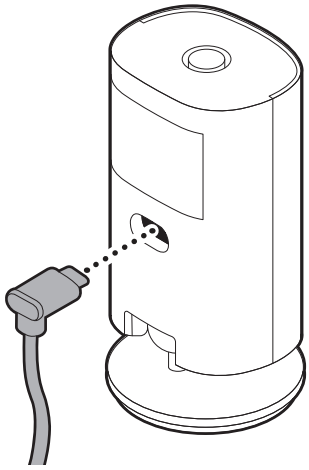

2.

Plug the power supply into an outlet and wait for your camera to turn on.

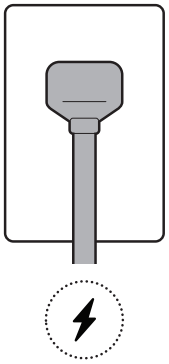

3.

(Optional) To point the camera upward, turn the base 180 degrees for better balance.

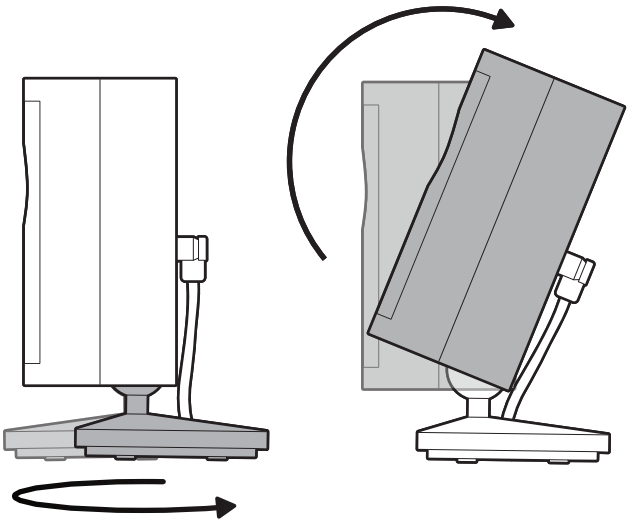

On a wall

1.

Remove the mounting plate from the base by pushing the plate in the direction of the arrow.

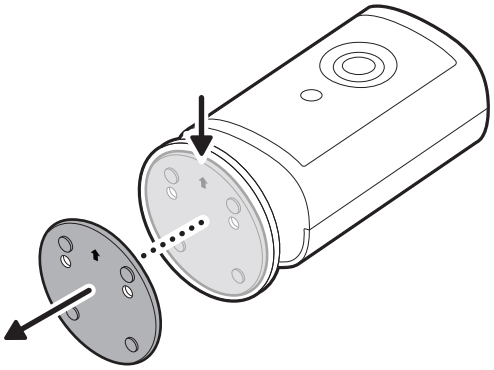

2.

Hold the mounting plate against the surface, and mark screw holes.

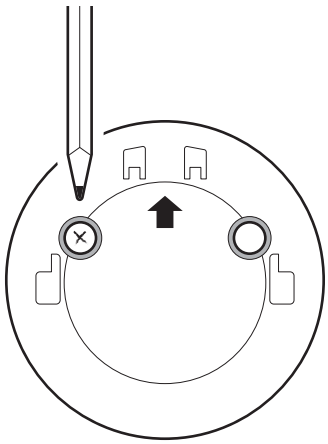

On stucco, brick, or concrete, use a 3/16 in (5 mm) masonry bit to drill holes for the included wall anchors.

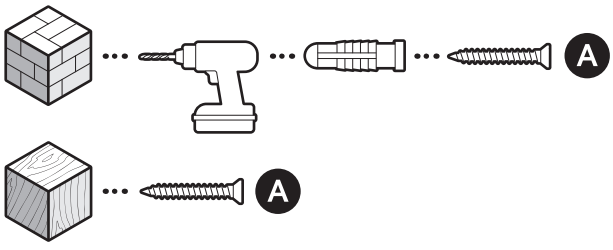

3.

Install the mounting plate with the UP arrow pointing up.

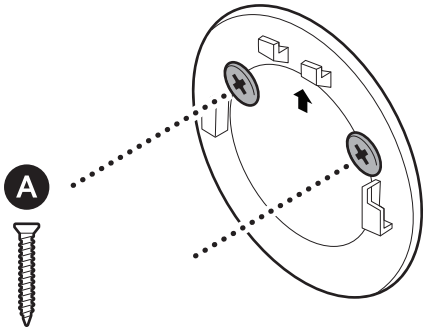

4.

Connect the included cable to the port on the back of your camera.

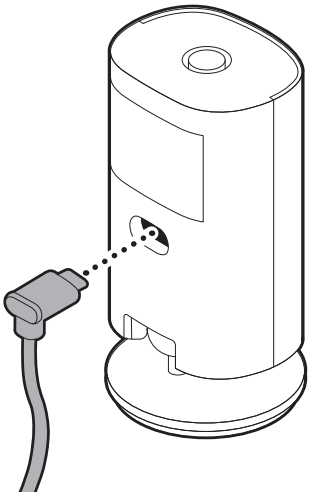

5.

Swivel the base toward the back of your camera.

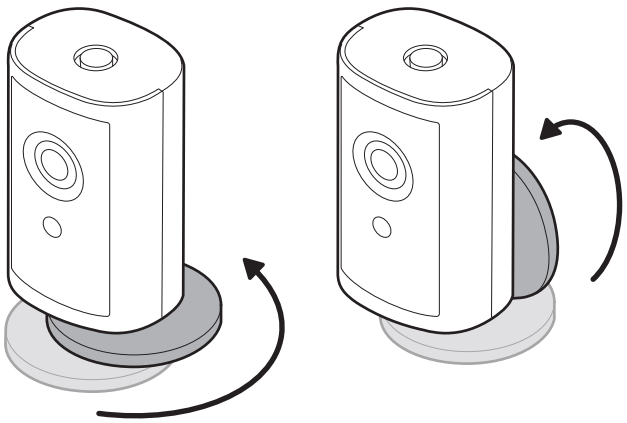

6.

Slot your camera onto its mounting plate.

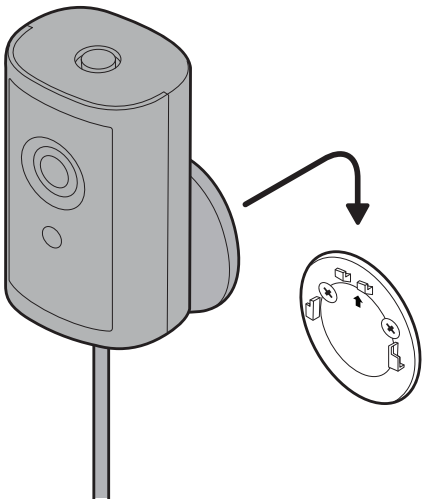

7.

Anchor the power cable to the wall with a cable clip.

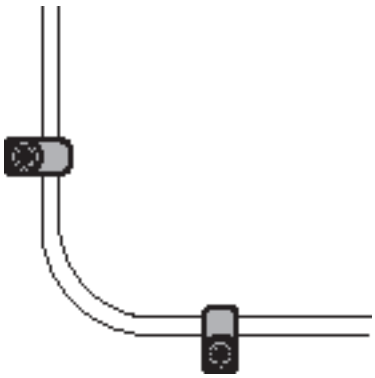

8.

Plug the power supply into an outlet and wait for your camera to turn on.

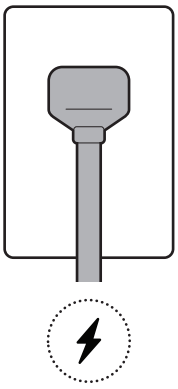

On a ceiling

1.

Remove the mounting plate from the base by pushing the plate in the direction of the arrow.

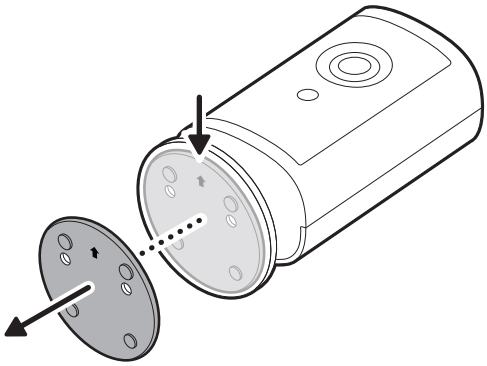

2.

Hold the mounting plate against the surface, and mark screw holes.

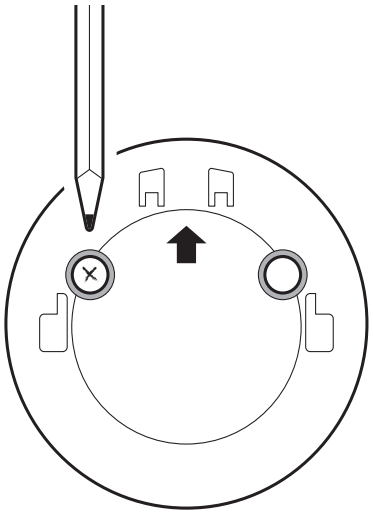

3.

Install the mounting plate with the UP arrow pointing toward your desired viewing direction.

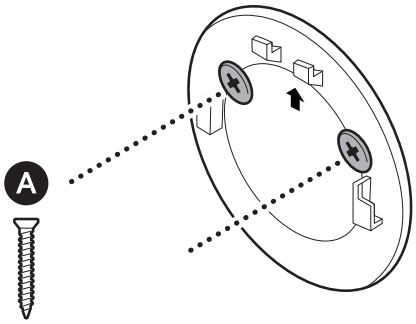

On stucco, brick, or concrete, use a 3/16 in (5 mm) masonry bit to drill holes for the included wall anchors.

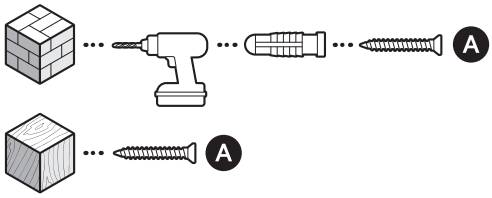

4.

Connect the included cable to the port on the back of your camera.

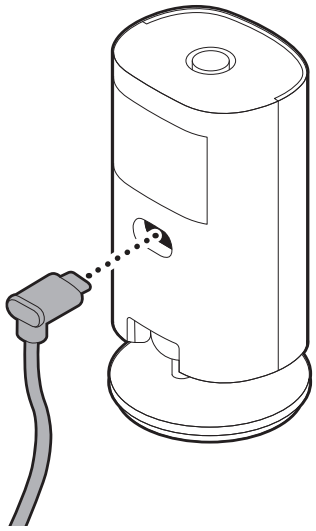

5.

Slot your camera onto its mounting plate.

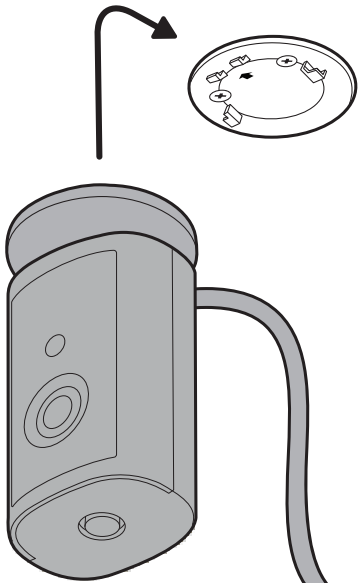

6.

Anchor the power cable to the wall or ceiling with a cable clip.

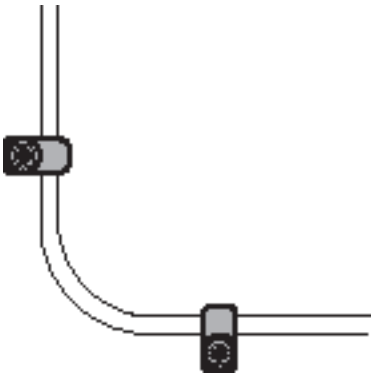

7.

Plug the power supply into an outlet and wait for your camera to turn on.

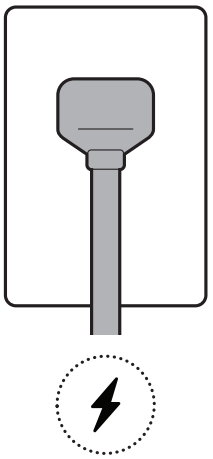

Attaching the lens cover

1.

Insert the peg into the notch at the bottom of your camera.

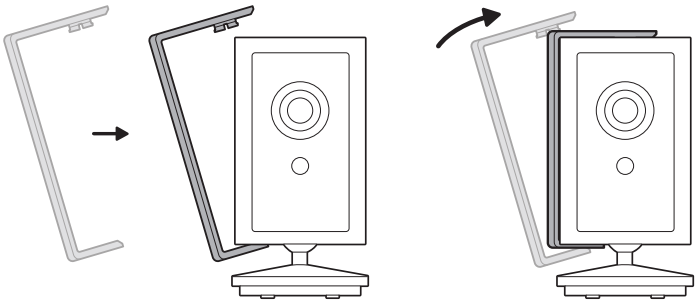

2.

Push until you hear a click to secure.

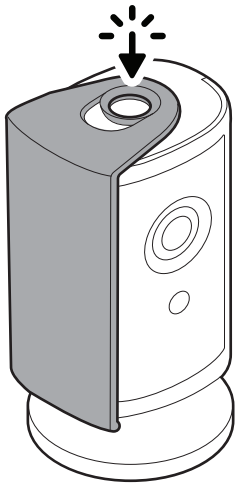

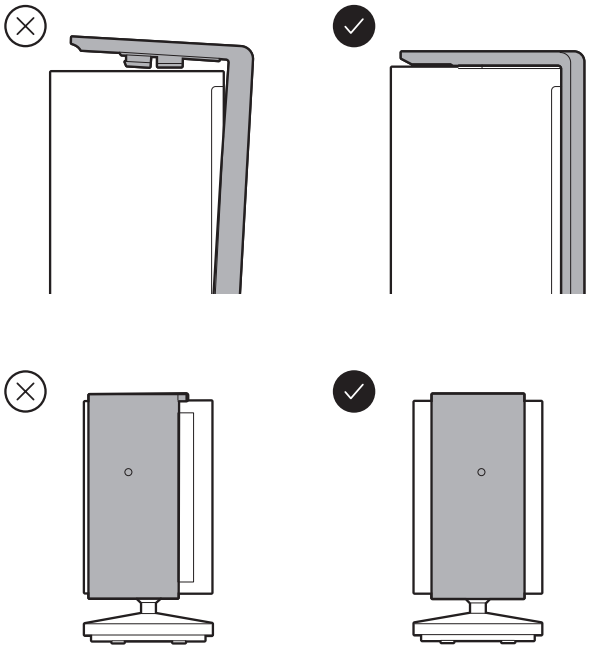

Using the lens cover

1.

To cover your camera, slide the lens cover to the locked position until you hear a click.

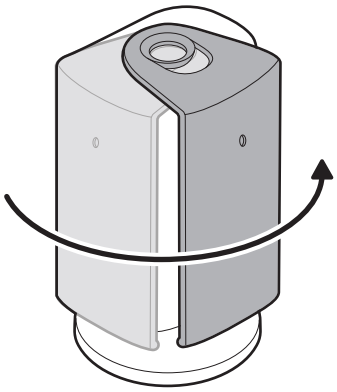

2.

To uncover your camera, slide the lens cover to the unlocked position until you hear a click.

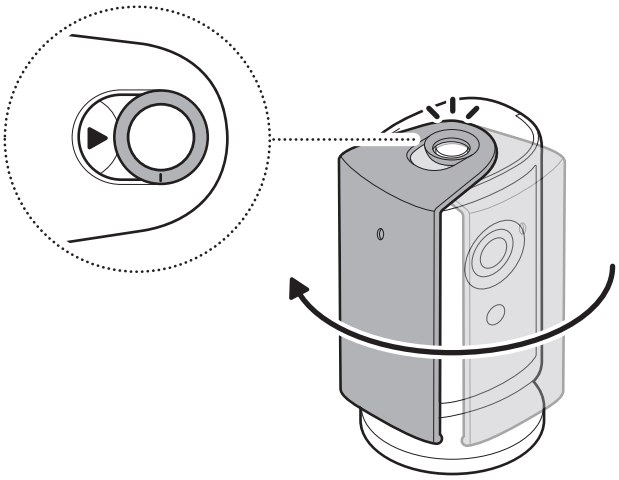

Removing the lens cover

1.

Slide the lens cover to the unlocked position.

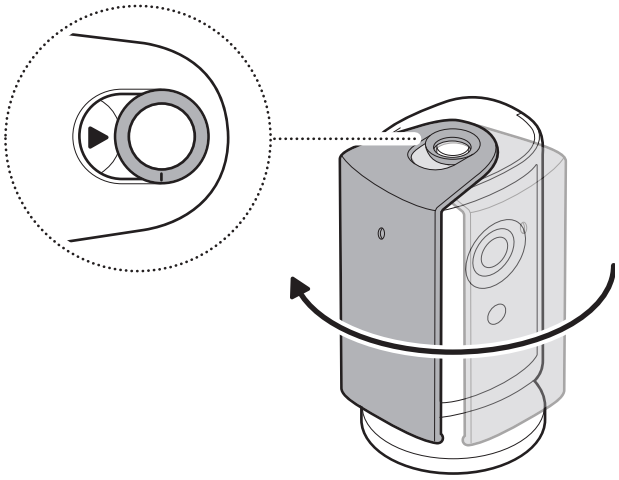

2.

Lift the top edge of the lens cover to detach it from the camera.

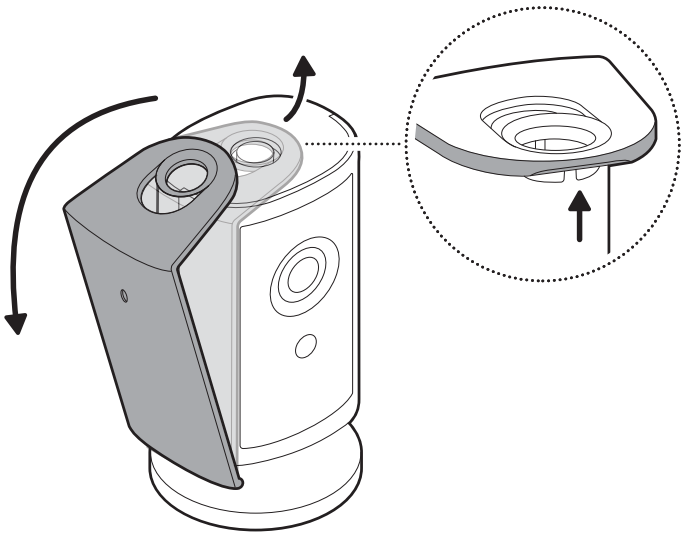

3.

Detach the peg from the bottom to remove.

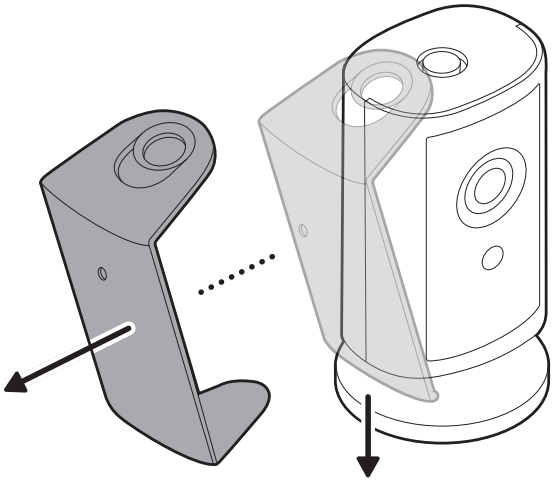

ring.com/contact

ring.com/help

Ring LLC 12515 Cerise Ave, Hawthorne, CA, 90250 USA

Ring LLC / **Amazon EU S.à.r.l.**, 38 Avenue John F. Kennedy, L-1855 Luxembourg / Amazon UK, 1 Principal Place, Worship Street, London, EC2A 2FA, United Kingdom

アマゾンジャパン合同会社〒153-0064 東京都目黒区下目黒1-8-1

شركة **Ring LLC** طريق سيريس مبنى 12515 مدينة هاوثورن، كاليفورنيا، 90250، الولايات المتحدة الامريكية.

©2026 Ring LLC or its affiliates. Ring and all related marks are trademarks of Ring LLC or its affiliates.

©2026 Ring LLC又はその関連会社。Ring及びこれらに関するすべての商標は、Ring LLC又はその関連会社の商標です。