GAGGENAU



Vario 400 series gas cooktop
VG 425

VG 425 211CA
Stainless steel.
Width 15″ (38 cm).
Natural gas. For conversion to LP gas, LP kit (Part No. 10004446) must be ordered.

Installation accessories

In a combination of several Vario cooktops or VL 414 downdraft, connecting strips must be used. Choose respective VA 420 strip from one of the below, depending on type of installation.

VA 420 004
Invisible connection strip for combination with other Vario 400 series flush mounting.

VA 420 010
Connection strip for combination with other Vario 400 series appliances for surface mounting.

VA 440 010
Stainless steel appliance cover with mounting strip.
Only available for individual Vario installation.

Optional accessories

AA 414 010
Stainless steel, removable air deflector for gas Vario next to VL 414 downdraft.

Additional connection cables for connecting the electronic control knobs (optional)

Part No. 12013604
1 ft (0.3 m) connection cable.

Part No. 12013606
3 3/8″ ft (1 m) connection cable.

Part No. 12013607
5 ft (1.5 m) connection cable.

Combinable with:

VL 414 712
AL 400 792 / AL 400 722
AW 442 720
AF 210 791

Good to know:

Wall installations require the hood to be as large as the cooktop(s). Island installations require the hood to be larger than the cooktop(s).

Highlights
- Two multi-ring burners combined output of 20,500 BTU.
- Full electronic power level regulation on 12 levels.
- Precise and reproducible flame size.
- Automatic ignition, electronic flame monitoring with automatic re-ignition.
- Simmer function for cooking on a very low output level.
- Solid stainless steel control knobs.
- Precision-crafted 3 mm stainless steel.
- For surface mounting with a visible edge or for flush mounting.
- Can be combined with other Vario 400 series products.

Cooking zones
1 two-ring high-output burner 570–13,600 BTU (165–4,000 W), suitable for pots and pans up to a maximum ø 11″.
1 two-ring standard-output burners 570–6,800 BTU (175–2,000 W), suitable for pots and pans up to a maximum ø 9 7/16″.

Operation
Control knobs with illuminated ring, cooking zone and output level markings.
One-handed operation.
Full electronic control in 12 output levels for exact power level regulation plus simmer function.
Automatic ignition.

Features
Simmer function.
Cast-iron pan support with flat, continuous pot surface.
Brass burner rings.
Equipped for natural gas. For conversion to LP gas, LP kit (Part No. 10004446) must be ordered.

Safety
Electronic flame monitoring with automatic re-ignition.
Residual heat indication.
Safety shut-off.

Planning notes
Depending on the type of installation (surface-mounted or flush-mounted, the specific location of the cut out and the knob positions may vary.
The drawing "Installation of the control knob" must be observed if the panel is more than 1″ thick (there must be a recess at the rear).
If combining several Vario 400 series appliances, a connection strip VA 420 must be placed between the appliances. Depending on the type of installation, the corresponding connection strip must be provided.
The weight bearing capacity and stability, in the case of thin countertops in particular, must be supported using suitable substructures. Take into account the appliance weight and additional loads.
Additional instructions for flush mounting:
Installation is possible in countertops made of stone, synthetics or solid wood. Minimum countertop thickness ¾″ (20 mm) for surface mounted installation. Minimum countertop thickness 1 3/16″ (30 mm) for flush installation.
Heat resistant and watertight sealing of the cut edges must be observed. For a suitable heat resistant silicone please consult the countertop manufacturer.
The groove must be continuous and even, so that uniform placing of the appliance on the gasket is ensured. Do not use discontinuous lining.
The joint width may vary due to size tolerances of the combinations and of the countertop cut out.

Please read additional planning notes on pages 84–89.

If installing several appliances in individual cut outs allow for a minimum distance of 2″ between the cooktops.
Plan for an electrical connection (the appliance is not operable without power supply).
Air intake from above.
No intermediate shelf required.
Rear panel and wall trims must be heat-resistant and consist of a non-flammable material.
A minimum clearance of at least 6″ from adjacent heat-sensitive cabinet or contact surfaces must be observed or thermal insulation fitted.
If operated next to the downdraft ventilation VL 414, the air deflector AA 414 010 is recommended to ensure maximum performance of the cooktop.
With a total connected load of more than 37,533 BTU local regulations concerning room ventilation, room size and combination of extraction or recirculation hoods must be observed.
Minimum clearance between gas cooktop(s) with more than 37,533 BTU and ventilation hood must be 30″.
Appliance can be snapped into the countertop from above.
Appliance weight: approx. 30 lbs.

Rating
Total rating gas/electric:
20,500 BTU / 15 W.
Total amps: 15.
Electrical: 120 V / 60 Hz.
Electrical connection:
Plan for a 55″ long connecting cable with 3 prong NEMA 5-15 plug.

Gaggenau reserves the absolute and unrestricted right to change product materials and specifications, at any time, without notice. Consult the product's installation instructions for final dimensional data and other details prior to making cut out. Warranties: Please see Use & Care manual or Gaggenau website for statement of limited product warranty. For more information on our entire line of products, go to www.gaggenau.com or call 1-877-442-4436.

GAGGENAU

Surface-mount Installation

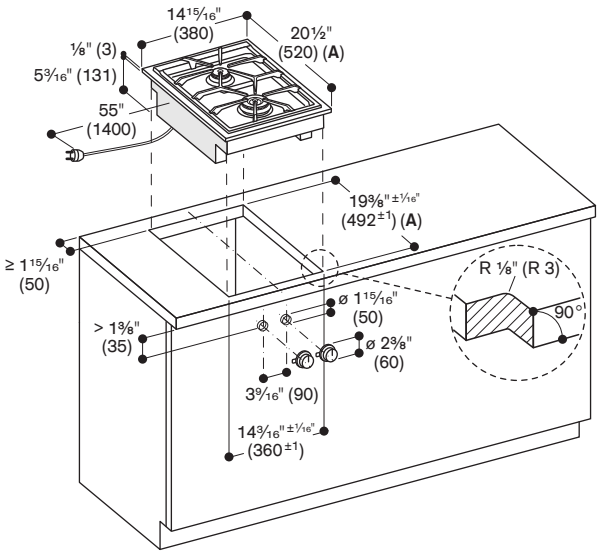

Minimum countertop thickness ¾″ (20 mm) for surface mounted installation.
See separate planning notes on page 86.

Flush-mount Installation

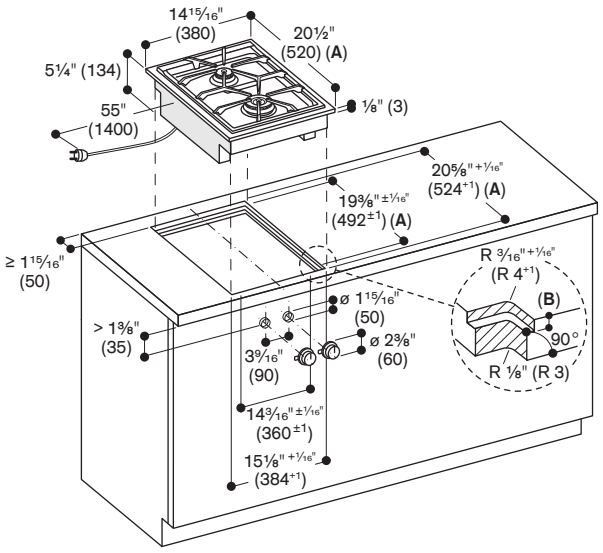

Minimum countertop thickness 1 3/16″ (30 mm) for flush installation.
See separate planning notes on page 84.

Installation of the control knob: surface mounting

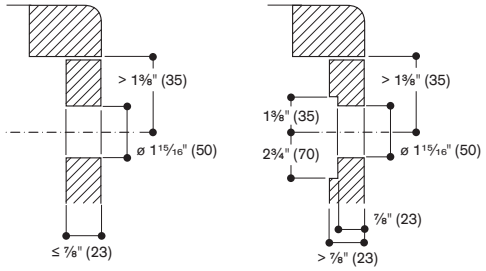

Installation of the control knob: flush mounting

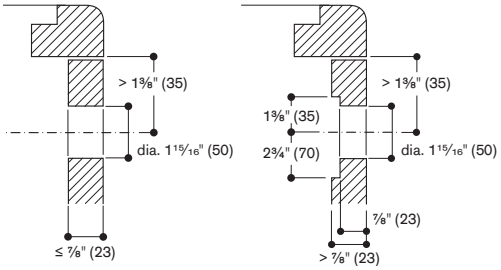

Gas connection

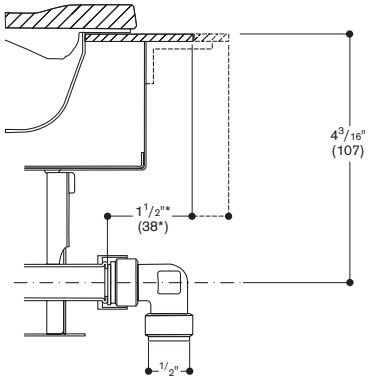

* 2 1/16" (53 mm) with appliance cover.

View from above

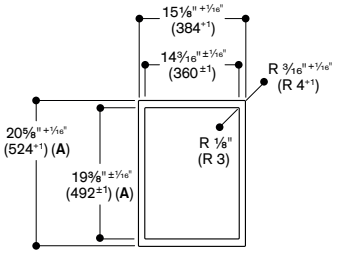

A: When installing with appliance cover consider the deeper cut-out (observe separate planning notes)

Longitudinal section

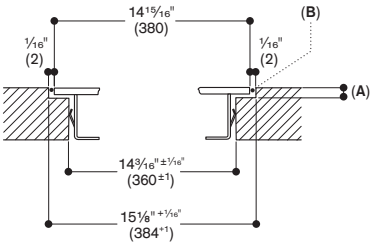

A: 1/8″ (3.5–0.5)
B: Fill with silicone

Cross-section

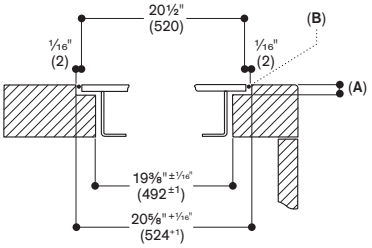

A: 1/8″ (3.5–0.5)
B: Fill with silicone

When installing a single Vario with an appliance cover,
see separate planning notes on page 89.

PFAS

Numbers indicated
inside parenthesis ( ) = mm

www.gaggenau.com/us
Revised: July 2026

Gaggenau reserves the absolute and unrestricted right to change product materials and specifications, at any time, without notice. Consult the product's installation instructions for final dimensional data and other details prior to making cut out. Warranties: Please see Use & Care manual or Gaggenau website for statement of limited product warranty. For more information on our entire line of products, go to www.gaggenau.com or call 1-877-442-4436.