ASSEMBLY INSTRUCTIONS

Broma Chandelier

Thank for your purchasing this quality product. Be sure to check all packing material carefully for small parts which may have come loose inside the carton during transit. Identify and count all parts and compare with the parts list below.

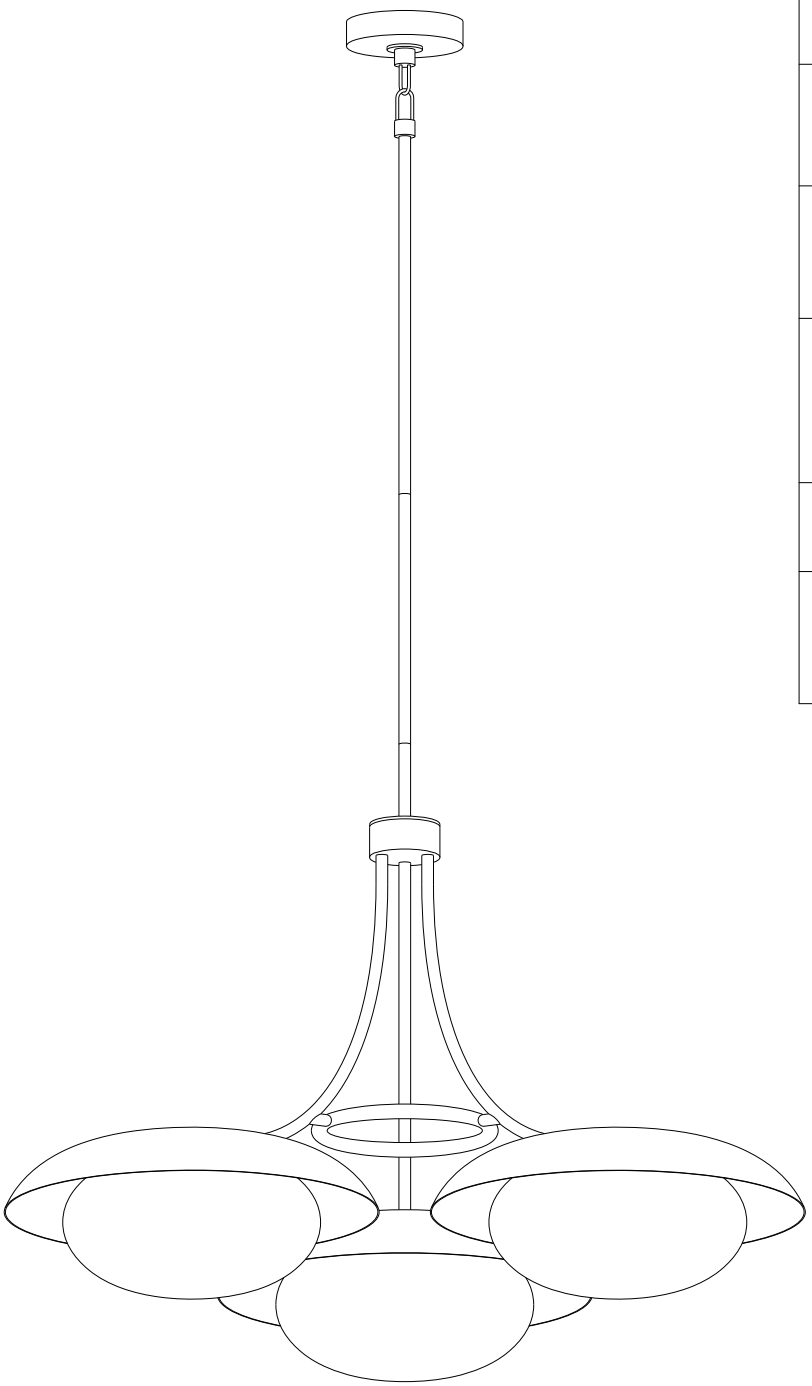

HARDWARE LIST			
A		MOUNTING STRIP	01
B		CANOPY	01
C		PIPE 6" PIPE 12" PIPE 18"	02 02 02
D	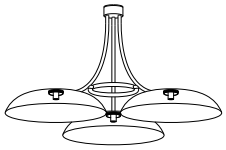	CHANDELIER	01
E		BULB (NOT INCLUDED)	03
F	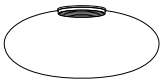	GLASS SHADE	03

MADE IN INDIA

ASSEMBLY INSTRUCTIONS

Broma Chandelier

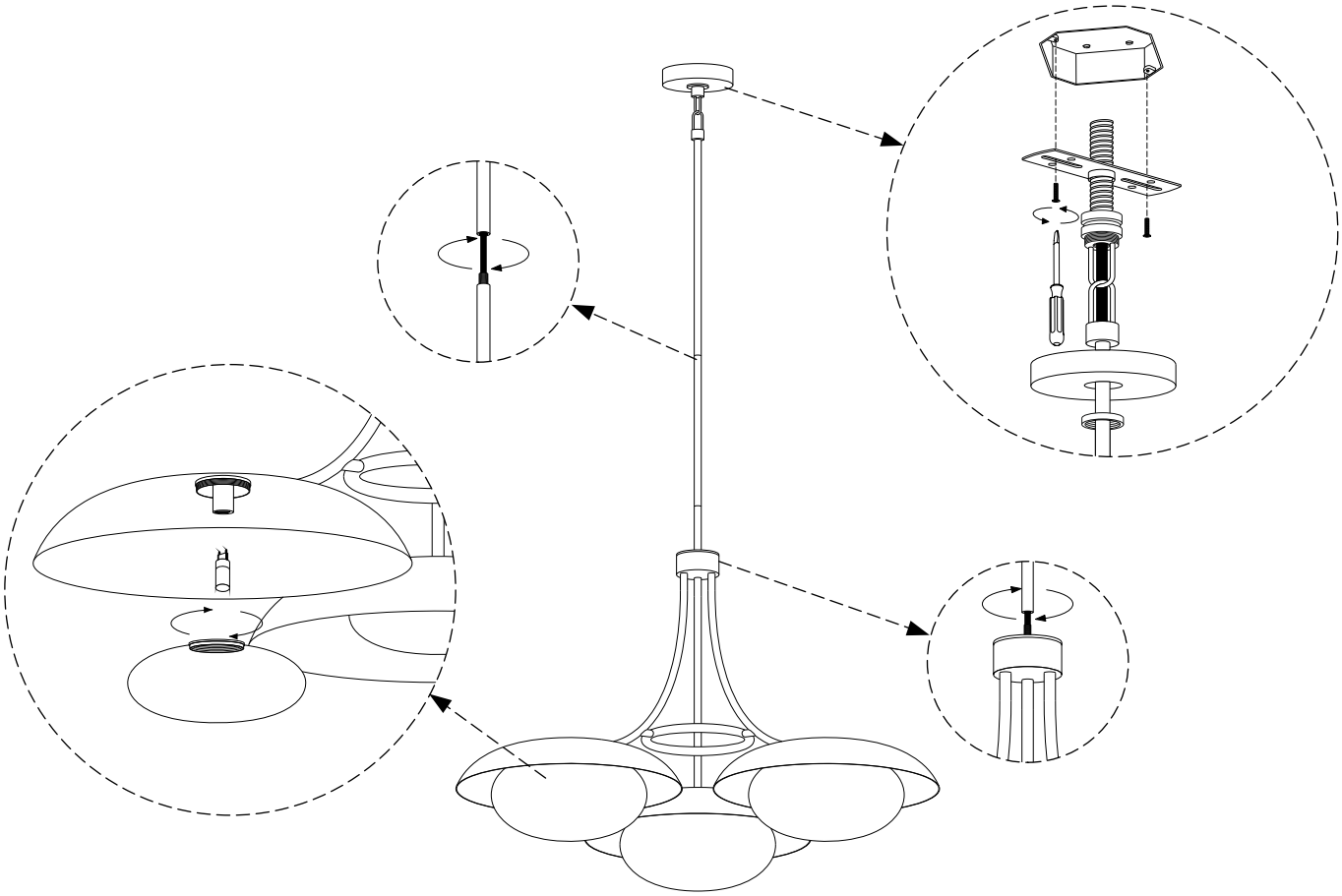

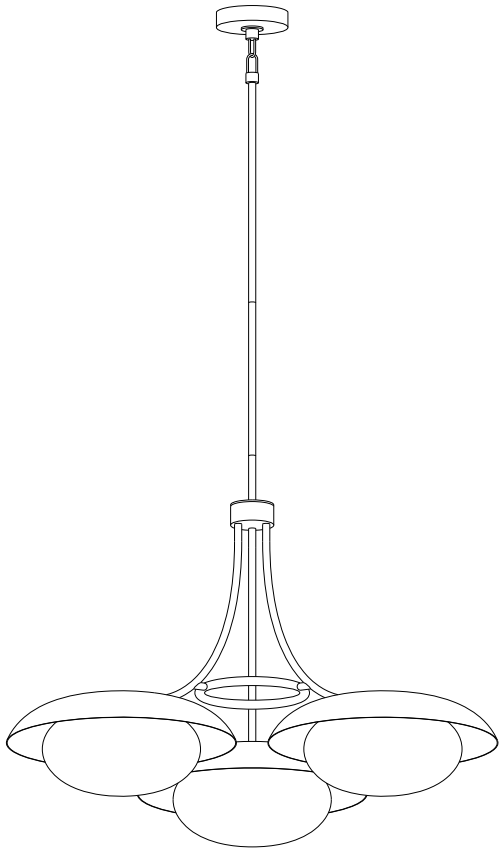

MADE IN INDIA

ASSEMBLY INSTRUCTIONS

252194 - Broma Chandelier

WIRING CONNECTIONS

1. Shut down the power at the breaker panel.
2. Connect wires:

Ground wire: Connect fixture ground wire to supply ground wire

Neutral wire: Connect fixture neutral wire to supply neutral wire

Hot wire: Connect fixture hot wire to supply hot wire

3. Make sure all connections are tight, then carefully tuck into the junction box

IMPORTANT SAFETY INSTRUCTIONS:

1. Use an authorized and certified electrician for consultation and installation. Electrician must be familiar with commercial - type applications of very heavy Chandeliers / Sconces.
2. This fixture has been rated for 3 x 25 - Watt maximum Type G9 standard bulbs.
3. To avoid the risk of fire, do not exceed the recommended wattage.
4. The manufacturer and distributor accept no liability for incorrect installation.
5. For indoor use only.

WARNINGS:

1. Turn - off electricity supply at main circuit panel before installing. Do not connect electricity supply until your ceiling / wall light is fully assembled and installed.
2. To reduce the risk of fire, electrical shock, or personal injury, always turn off the ceiling / wall light and allow it to cool prior to replacing light bulb. Do not touch bulb when fixture is turned on or look directly at light bulb. Keep flammable materials away from light bulb.
3. Deviation from instruction may result in a risk of fire or electric shock. Please read all instructions completely before installation.

THIS PRODUCT IS NOT A TOY AND HAS NO PLAY VALUE.

STRANGULATION HAZARD

Keep cord at least 3 feet away from cribs, bassinets, and toddler beds.

Keep out of reach of children under 3 years of age.

MADE IN INDIA