DESIGNER

ALTO

WALL

CUSTOM HOOD

ZEPHYR

ZEPHYRONLINE.COM



Polished stainless steel banding



Shown with optional polished gold finish banding and 12” duct cover



Shown with optional polished copper finish banding and 12” duct cover

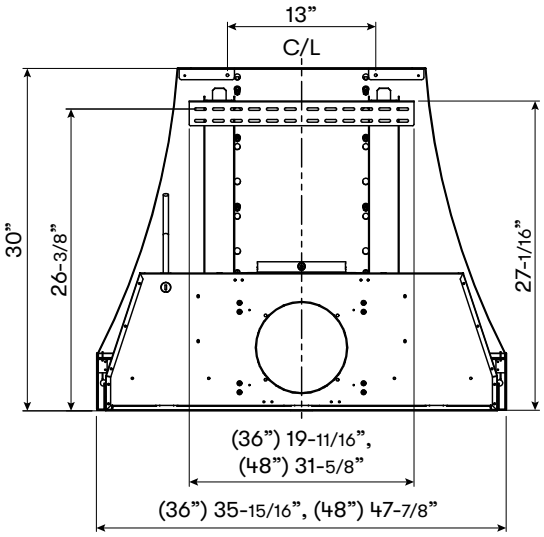

BACK

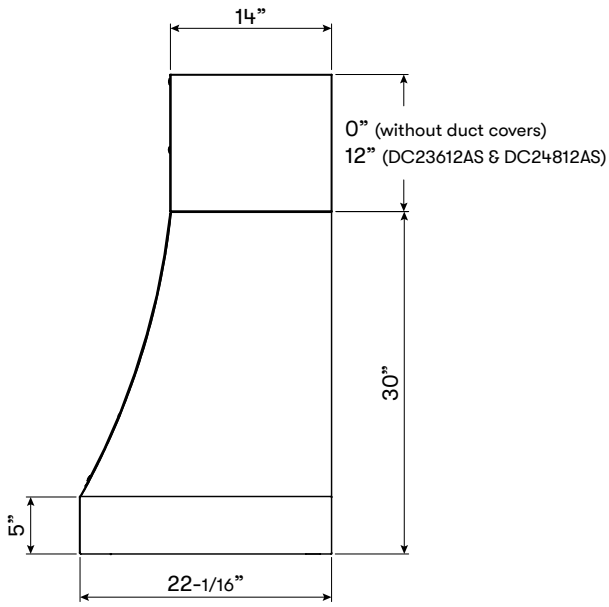

SIDE

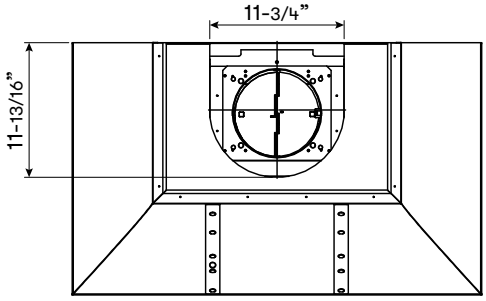

TOP

DESIGNER

ALTO

WALL

CUSTOM HOOD

ZEPHYR

ZEPHYRONLINE.COM

MODEL		
Stainless Steel w/ Polished Stainless Steel Banding	CHAL36ASX	CHAL48ASX
Size	36”	48”
COMPATIBLE HOOD INSERTS (Sold Separately)*		
Monsoon Mini	AK9134BS	NA
Monsoon Mini II	AK9534AS	AK9546AS
Monsoon I	AK9234CS	AK9246CS
Monsoon Connect	AK9434BS	AK9446BS
DUCT SPECIFICATIONS		
Vertical	Yes	Yes
Horizontal	Yes	Yes
OPTIONAL ACCESSORIES		
12” Duct Cover w/ Polished Stainless Steel Banding**	DC23612AS	DC24812AS
Hood Banding Kit - Polished Gold Finish	BKAL36APG	BKAL48APG
Hood Banding Kit - Polished Copper Finish	BKAL36APC	BKAL48APC
12” Duct Cover Banding Kit - Polished Gold Finish	BKDC212APG	BKDC212APG
12” Duct Cover Banding Kit - Polished Copper Finish	BKDC212APC	BKDC212APC
Stainless Steel Telescopic Backsplash	AK1716	AK1718

HOW TO CUSTOMIZE YOUR ALTO HOOD

Step 1

Choose your body size, 36” or 48”.
Hoods include polished stainless steel banding.

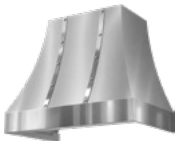

CHAL36ASX
36”

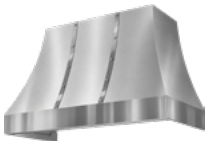

CHAL48ASX
48”

Step 2

Choose your hood insert (sold separately).



Monsoon Mini
AK9134BS



Monsoon Mini II
AK9534AS
AK9546AS



Monsoon I
AK9234CS
AK9246CS



Monsoon Connect
AK9434BS
AK9446BS

Step 3 (optional)

Choose your duct cover.
Duct cover includes polished stainless steel banding. Duct covers are stackable to reach taller ceiling heights.



12” Duct Cover
DC23612AS (36”)
DC24812AS (48”)

Step 4 (optional upgrade)

Choose your banding kit:
Polished Gold or Polished Copper finishes for the hood and duct covers.



Polished Gold Finish Banding
BKAL36APG (36”)
BKAL48APG (48”)

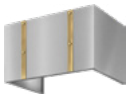

Polished Gold Finish Banding
BKDC212APG

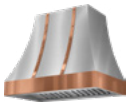

Polished Copper Finish Banding
BKAL36APC (36”)
BKAL48APC (48”)

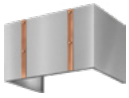

Polished Copper Finish Banding
BKDC212APC

*Required to complete installation
**Stackable for taller ceiling heights