MOVADO

OPERATING INSTRUCTIONS
WARRANTY & SERVICE GUIDE

TABLE OF CONTENTS

	PAGE
ABOUT MOVADO	3
CARE AND MAINTENANCE	4
OPERATING INSTRUCTIONS	
1 Standard 2-Hand Day/Date – Quartz (Includes BOLD Evolution Day Date)	6
2 Standard 2-Hand and 3-Hand Models – Quartz and Automatic (Includes 1881 Automatic women's, Bold Evolution 2.0, Heritage Series 1917 and most Movado Museum Dial watches)	7
3 3-Hand Automatic Skeleton Models (Includes SE Skeleton Automatic)	8
4 Standard 3-Hand/Date and 3-Hand Day/Date Models – Quartz and Automatic (Includes BOLD Quest, BOLD Quest Automatic, Heritage Series Datron, Heritage Series Ondoplan, Museum Classic Automatic, SE Quartz, Museum Imperiale, Heritage Series Calendoplan S Auto SE Automatic, SE Diver, select Series 800 Quartz and Series 800 Automatic models, select Vizio Quartz and Vizio Automatic models, and 1881 Automatic)	9
5 3-hand Automatic Models with Day/Date Display (Includes Movado Heritage Series Datron Day/Date)	10
6 Standard 3-Hand Automatic (Includes BOLD Fusion Automatic and Heritage Series Calendoplan Automatic)	11
7 Automatic Chronograph – 1/4 of a Second – Type A (Includes SE chronograph automatic models and Heritage Super Sub Sea Models)	12
8 Quartz Chronograph 1/1 of a Second – Type A (Includes Series 800 Quartz chronograph & Movado BOLD TR90 chronographs)	16
9 Quartz Chronograph 1/5 of a Second – Type B (Select 38 mm Movado BOLD chronograph models)	19
10 Quartz Chronograph 1/10 of a Second – Type B (Select Vizio Quartz chronographs)	21
11 Quartz Chronograph 1/10 of a Second – Type C (Includes Movado Heritage Series Circa)	23
12 Quartz Chronograph 1/10 of a Second – Type D (Select 38 mm Movado BOLD Quartz chronographs)	26
13 Quartz Chronograph 1/1 of a Second – Type C (Includes BOLD Quest Chrono and Movado Heritage Series Calendoplan chronographs)	28
SPECIAL FEATURES	
A Rotating Bezel	31
B Screw-down Crown	32
C Rotating Reflector Ring	33
D Interchangeable Straps	34
E Mesh Bracelet Sizing	35
QUARTZ WATCH LABELING GUIDANCE FOR COMPLIANCE WITH REESE'S LAW	36
OBTAINING SERVICE	38
WARRANTY INFORMATION	39
MOVADO AUTHORIZED SERVICE CENTERS	40
SAFTEY CONCERNS	41

MOVADO

A premier Swiss watch company renowned for its modern design aesthetic, Movado has earned more than 100 patents and 200 international awards for artistry and innovation since 1881. It is the hallmark of some of the most famous timepieces ever created, notably the Movado Museum® Watch.

Designed in 1947 by artist Nathan George Horwitt and regarded today as an icon of Modernism, the watch dial defined by a single dot at 12 o'clock, symbolizing the sun at high noon, has been acclaimed for purity of design unrivaled in the history of time-keeping.

All Movado watches are distinguished by a legacy of design innovation and a dedication to the future of time. Congratulations on your purchase.

CARE AND MAINTENANCE

Like any finely crafted mechanism, your Movado watch requires periodic maintenance to ensure optimal performance. Maintenance includes complete disassembly, cleaning, replacement of parts as needed, reassembly and lubrication of the movement. A maintenance interval of 3 to 5 years is recommended, in addition to any required battery replacement.

Never open the watch yourself. If your watch needs repair or adjustment, take or mail it directly to a Movado Authorized Service Center. For the most current and complete worldwide listing, visit https://repairs.mgiservice.com/movado.

NOTE: The Movado Watch Company assumes responsibility only for service performed at its Authorized Service Centers.

SHOCK

All Movado watches have shock-resistant movements, individually tested to meet international standards.

DUST

Dust can enter a watch if the case, crystal or crown is not intact. A small particle is enough to stop the movement. Have your watch repaired promptly if the crystal becomes loose, chipped or cracked, or if there is damage to the case or crown.

MAGNETISM

The exposure of a timepiece to strong magnetic fields will affect its time-keeping, and may cause it to stop. A quartz watch should resume working with its original accuracy when removed from the magnetic field; a mechanical timepiece may require demagnetization before it will operate again.

WATER RESISTANCE

All Movado watches are tested to meet international standards for water resistance.

Most styles are water resistant to 3 bar (30 meters/ 3 ATM/ 99 feet); certain models are water resistant to even greater pressures/depths, as marked on the dial or case-back.

CAUTION: If the water resistance limit is not marked on your watch, do not subject it to a pressure/depth greater than 3 bar (30 meters/ 3 ATM/ 99 feet), or your watch could be damaged and your warranty will be voided.

IMPORTANT: Do not operate the watch crown, push-buttons on a chronograph model, or any other pushers/buttons when the timepiece is wet or under water.

NOTE: The Movado Watch Company will not be responsible for any damage caused by or related to leakage originating from improper handling or damage to the case, crown, gaskets or crystal.

To maintain water resistance, yearly maintenance is required. The gaskets and crown which seal the case are subject to wear and deterioration under normal use. These parts should be inspected and replaced as needed each time the watch is opened for service, including battery changes.

Your Authorized Movado Service Center will automatically retest your watch for water resistance as a routine step in all service orders.

CARE AND MAINTENANCE

OTHER PRECAUTIONS:
If your watch is equipped with a screw-down crown or pushers, be sure to screw it/them back down into the case after every operation.

Water resistance applies only to the watch case; some watch straps should not be worn under water or subjected to wet conditions. Please see STRAP CARE.

Avoid exposing your watch to sudden and excessive temperature variations.

Do not drop your watch or bang it against a hard surface. Water resistance must be rechecked after every violent shock.

Clean your watch regularly by wiping it with a soft cloth dampened with fresh water, especially after exposure to seawater.

STRAP CARE

While the life span of a watch strap depends on your care and wearing habits, as well as the climate in which you live, proper care will extend its life.

Leather straps should be kept dry. Exposure to water may cause a leather watch strap to become brittle and eventually break. To preserve the finish of the leather, contact with perfumes should be avoided. Following exposure to chlorinated or salt water, gently damp wipe your leather strap with fresh water, and air dry.

NOTE: Movado watch straps are not covered by the Movado watch warranty.

BATTERY INFORMATION

A Movado quartz timepiece has a 1.55 Volt silver-oxide battery that is specially designed for watches. It will last approximately 18 – 36 months under normal use.

NOTE: Frequent use of special functions, like the stopwatch timer on chronograph models, may shorten battery life.

End-of-life feature: The seconds hand on many models will start to move haltingly in 4-second increments when the battery is almost exhausted, signaling the need to have it replaced.

Battery replacement: It is important to use only the replacement battery recommended by Movado. Take or send your watch to an Authorized Service Center to have battery changed – your old battery will be disposed of/recycled properly. Do not attempt to change the battery yourself.

① STANDARD 2-HAND DAY/DATE – QUARTZ

Includes BOLD Evolution Day Date

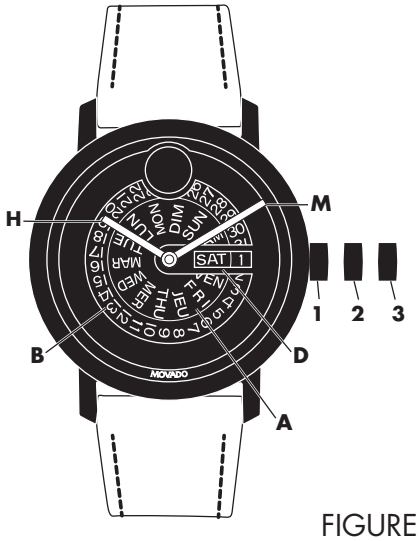

FIGURE A

LEGEND:

H – Hour hand
M – Minute hand
D – Day/Date window
1, 2, 3 – Crown positions
A – Day indicator plate
B – Date indicator plate

Crown positions:

Position 1 – Normal running position; crown pushed into case

Position 2 – Correction of Date + Day:
Correction of Day:
Pull the crown out to position 2 (watch still running). Turn crown counterclockwise until the desired day of the week appears in the required language. Push the crown back to position 1.

Position 3 – Time-setting position
Pull the crown out to position 3 (watch stopped). Turn the crown until the current time is displayed. Push the crown back to position 1.

To set the time:

1. Pull crown out to position 3; watch stops.
2. Turn crown in either direction to move hands to desired time.
3. Push crown back in to position 1; watch restarts, now set to correct time.

To correct the date:

1. Pull crown out to position 2; watch continues to run.
2. Turn crown clockwise until correct date appears in day/date window D.
3. Push crown back in to position 1.

To correct the day:

1. Pull crown out to position 2; watch continues to run.
2. Turn crown counterclockwise until correct day appears in day/date window D.
3. Push crown back in to position 1.

② STANDARD 2-HAND AND 3-HAND MODELS QUARTZ AND AUTOMATIC

Includes 1881 Automatic women's, Bold Evolution 2.0, Heritage Series 1917 and most Movado Museum Dial watches

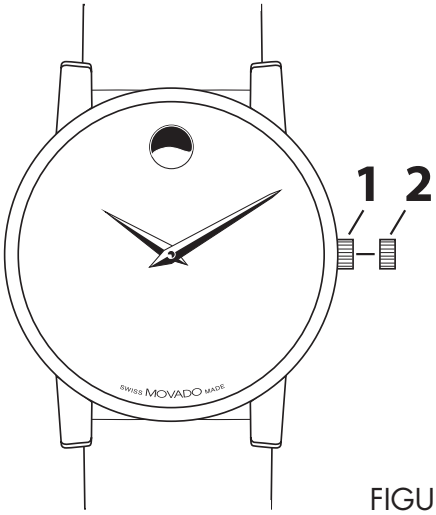

FIGURE A

Crown positions:

Position 1 – Normal running position.
Crown pushed into case.

Position 2 – To set TIME:
Rotate crown in either direction.

To manually wind an automatic movement:

The motion of your arm during normal daily activities should be sufficient to keep the movement of your Movado automatic timepiece wound. However, if you have not worn your watch for 38 hours or more, and the watch has stopped, you will need to wind it by hand before setting the time:

1. With the crown in position 1, turn the crown clockwise approximately 20 revolutions.
2. Reset time following instructions above.

Automatic watches do not contain batteries. They are charged by the movement of your wrist. If the watch is not worn it will stop running in about 38 hours. To get it started, turn the crown clockwise about 20-30 times until the second hand starts moving. You will most likely need to reset the time and date.

③ 3-HAND AUTOMATIC SKELETON MODELS

Includes SE Skeleton Automatic

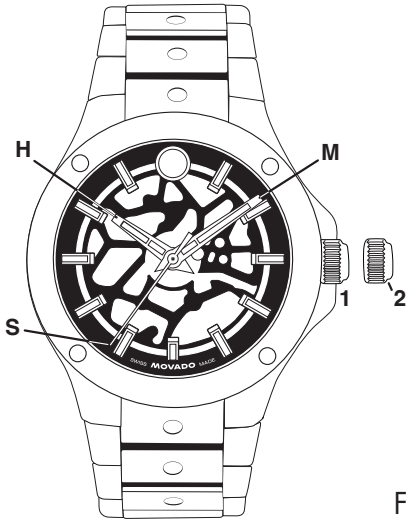

FIGURE A

LEGEND:
H – Hour hand
M – Minute hand
S – Seconds hand
1,2 – Crown Positions

Crown positions:
Position 1 – Normal running position.
Crown pushed into case.

Position 2 – To set TIME:
Rotate crown in either direction.

To manually wind an automatic movement:
The motion of your arm during normal daily activities should be sufficient to keep the movement of your Movado automatic timepiece wound. However, if you have not worn your watch for 38 hours or more, and the watch has stopped, you will need to wind it by hand before setting the time:

1. With the crown in position 1, turn the crown clockwise approximately 20 revolutions.
2. Reset time following instructions above.

Automatic watches do not contain batteries. They are charged by the movement of your wrist. If the watch is not worn it will stop running in about 38 hours. To get it started, turn the crown clockwise about 20-30 times until the second hand starts moving. You will most likely need to reset the time and date.

④ STANDARD 3-HAND/DATE AND 3-HAND/DAY/DATE MODELS QUARTZ AND AUTOMATIC

Includes BOLD Quest, BOLD Quest Automatic, Heritage Series Datron, Heritage Series Ondoplan, Museum Classic Automatic, Museum Imperiale, Heritage Series Calendoplan S Auto, SE Quartz, SE Automatic, SE Diver, select Series 800 Quartz and Series 800 Automatic models, select Vizio Quartz and Vizio Automatic models, and 1881 Automatic

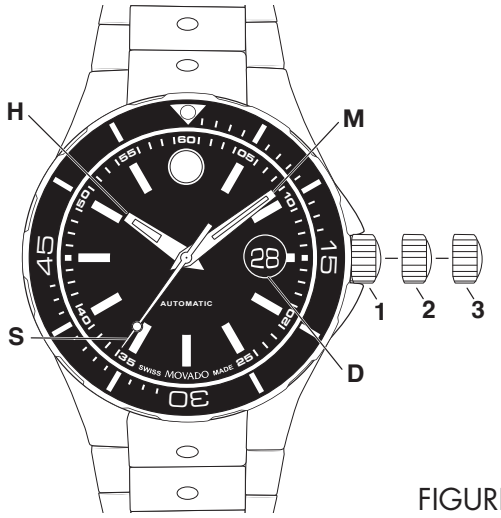

FIGURE A

LEGEND:

H – Hour hand
M – Minute hand
S – Seconds hand
D – Date Window
1,2,3 – Crown Positions

Crown positions:

Position 1 – Normal running position.
Crown pushed into case.

Position 2 – To set DATE*:
Rotate crown clockwise.
To set DAY*:
Rotate crown counterclockwise.

Position 3 – To set TIME*:
Rotate crown in either direction.

*IMPORTANT: DO NOT set the Date on Vizio models when the time is between 9:30 PM and 3:00 AM, and automatic calendar changes are already in progress. Doing so could damage the mechanism.

*NOTE: If your watch has a screw-down crown, before you can set the Date (Day/Date) or Time, you must first unlock the crown by turning it counterclockwise approximately six rotations. After Time/Date (Day/Date) setting, the crown must be screwed back down into the case to ensure water resistance.

To manually wind an automatic movement:

The motion of your arm during normal daily activities should be sufficient to keep the movement of your Movado automatic timepiece wound. However, if you have not worn your watch for 38 hours or more, and the watch has stopped, you will need to wind it by hand before setting the time:

1. With the crown in position 1, turn the crown clockwise approximately 20 revolutions.
2. Reset time following instructions above.

⑤ 3-HAND AUTOMATIC MODELS WITH DAY/DATE DISPLAY

Includes Movado Heritage Series Datron Day/Date

FIGURE A

LEGEND:

H – Hour hand
M – Minute hand
S – Seconds hand
W – Day Window
D – Date Window
1, 2, 3 – Crown positions

Crown positions:

Position 1 – Normal running position.
Crown pushed into case.
Position 2 – To set DATE:
Rotate crown clockwise.
To set DAY:
Rotate crown counterclockwise.
Position 3 – To set TIME:
Rotate crown in either direction.

*IMPORTANT: Do not adjust the Day or Date between the hours of 9:00 PM and 4:00 AM when automatic calendar changes are in progress, or the Day and Date may not change properly on the following day.

*NOTE: If your watch has a screw-down crown, before you can set the Date (Day/Date) or Time, you must first unlock the crown by turning it counterclockwise approximately six rotations. After Time/Date (Day/ Date) setting, the crown must be screwed back down into the case to ensure water resistance.

To manually wind an automatic movement:

The motion of your arm during normal daily activities should be sufficient to keep the movement of your Movado automatic timepiece wound. However, if you have not worn your watch for 38 hours or more, and the watch has stopped, you will need to wind it by hand before setting the time:

1. With the crown in position 1, turn the crown clockwise approximately 20 revolutions.
2. Reset time following instructions above.

⑥ STANDARD 3-HAND AUTOMATIC

Includes BOLD Fusion Automatic and Heritage Series Calendoplan Automatic

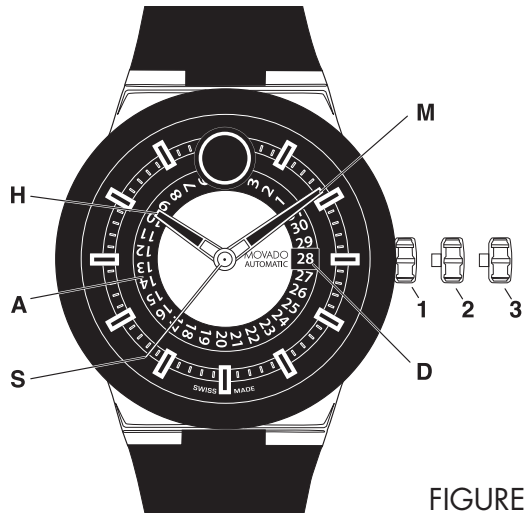

FIGURE A

LEGEND:

A – Date indicator plate
D – Date window
H – Hour hand
M – Minute hand
S – Seconds hand
1, 2, 3 – Crown positions

Crown positions:

Position 1 – Normal running position.
Crown pushed into case.

Position 2 – Correction of Date:
Pull the crown out to position 2 (watch still running).
Turn crown counterclockwise until the desired date appears in date window D. Push the crown back to position 1.

Position 3 – Time-setting position:
Pull the crown out to position 3 (watch stopped).
Turn the crown in either direction until the desired time is displayed. Push the crown back to position 1.

To manually wind an automatic movement:

The motion of your arm during normal daily activities should be sufficient to keep the movement of your Movado automatic timepiece wound. However, if you have not worn your watch for 40 hours or more, and the watch has stopped, you will need to wind it by hand before setting the time:

1. With the crown in position 1, turn the crown clockwise approximately 20 revolutions.
2. Reset time following instructions above.

Automatic watches do not contain batteries. They are charged by the movement of your wrist. If the watch is not worn it will stop running in about 40 hours. To get it started, turn the crown clockwise about 20-30 times until second hand starts moving. You will most likely need to reset the time and date.

⑦ AUTOMATIC CHRONOGRAPH 1/4 OF A SECOND – TYPE A

Includes SE chronograph automatic models

FIGURE A

LEGEND:
H – Hour hand
M – Minute hand
S – Second hand
C – Chronograph 60-seconds counter
E – Chronograph 30-minutes counter
F – Chronograph 12-hours counter
D – Date window
1, 2, 3 – Crown positions
A – Chronograph push-button (start/stop)
B – Chronograph push-button (reset)

Crown positions:
Position 1 – Normal running position and manual winding (rotate crown clockwise).
NOTE: Crown needs to be unscrewed before manual winding.

Position 2 – To set DATE: Rotate crown counter-clockwise.
Position 3 – Rotate crown in either direction.

This chronograph model features a minute counter (up to 30 minutes), hour counter, and small seconds subdial; center-mounted 1/4 of a second chronograph hand; and date window detailing. They can be used to time an event up to 12 hours in duration to the nearest 1/4 of a second.

NOTE: If your watch has a screw-down crown, before you can set the date (Day/Date), time or manual winding, you must first unlock the crown by turning it counterclockwise approximately six rotations. After time/date (Day/ Date) setting, the crown must be screwed back down into the case to ensure water resistance.

To manually wind an automatic movement:
The motion of your arm during normal daily activities should be sufficient to keep the movement of your Movado automatic timepiece wound. However, if you have not worn your watch for 62 hours or more, and the watch has stopped, you will need to wind it by hand before setting the time:

1. With the crown in position 1, turn the crown clockwise approximately 20 revolutions.
2. Reset time following instructions above.

Automatic watches do not contain batteries. They are charged by the movement of your wrist. If the watch is not worn it will stop running in about 62 hours. To get it started, turn the crown clockwise about 20-30 times until second hand starts moving. You will most likely need to reset the time and date.

⑦ AUTOMATIC CHRONOGRAPH 1/4 OF A SECOND – TYPE A

Includes SE chronograph automatic models

TIME/DATE SETTING

To set the time:

1. Unlock screw-down crown on models with this feature. See "Screw-down Crown" for instructions.
2. Pull crown out to position 3; watch stops.
3. Turn crown in either direction until hands indicate desired time.
4. Push crown back in to position 1; watch restarts.
5. Screw crown back into case on models with screw-down crown.

To adjust the time to the exact second:

1. Unlock screw-down crown on models with this feature.
2. As soon as small seconds hand S reaches <<60>> position, pull crown out to position 3; watch stops.
3. Turn crown to move hands and set time, making sure date changes at midnight, not noon.
4. Move hands slightly ahead of exact time, then slowly turn crown counterclockwise to align minute hand with correct minute marker.
5. Take an accurate time signal (from a radio news station, for example). When audible tone signals exact time, immediately push crown back in to position 1; watch restarts, now set to the exact time.
6. Screw crown back down into case on models with screw-down crown.

To correct the date (quick mode):

1. Unlock screw-down crown
2. Pull unlocked crown out to position 2; watch continues to run.
3. Turn crown counter-clockwise until correct date appears in window D.
4. Push crown back in to position 1 and screw back down into case.

NOTE: If a date is adjusted between 9:00PM and 12:00AM when automatic date changes are already in progress, it should be set to the following day: The date will not automatically advance at midnight if it has been corrected via quick mode during these hours.

OPERATING THE CHRONOGRAPH:

Overview:

Use buttons A and B to operate the chronograph. Pressing button A the first time will start the chronograph. Pressing A a second time will stop the chronograph, allowing elapsed time to be read. Pressing button A a third time will restart the chronograph. Pressing button B will reset chronograph hands C, E and F to zero.

Simple chronograph functions:

To measure the duration of a single, non-stop event:

1. Press button A to start chronograph.
2. Press button A a second time to stop chronograph and read the 3 chronograph hands to determine elapsed time, for example: 2 hours, 4 minutes, 38 seconds and 3/4 of-a-second.
3. Press button B to reset chronograph hands to zero.

⑦ AUTOMATIC CHRONOGRAPH 1/4 OF A SECOND – TYPE A

Includes Heritage Super Sub Sea Models

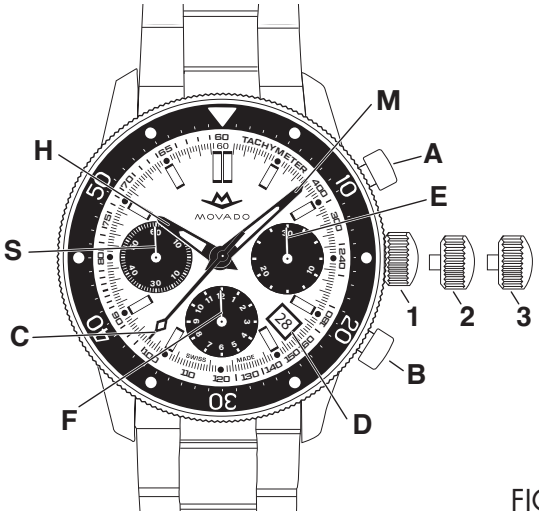

FIGURE A

LEGEND:
H – Hour hand
M – Minute hand
S – Seconds hand
C – Chronograph 60-seconds counter
E – Chronograph 30-minutes counter
F – Chronograph 12-hours counter
D – Date window
1, 2, 3 – Crown positions
A – Chronograph push-button (start/stop)
B – Chronograph push-button (split-time/reset)

Crown positions:
Position 1 – Normal running position. Crown pushed into case.
Position 2 – To set DATE: Rotate crown counter-clockwise.
Position 3 – Rotate crown in either direction.

This chronograph model features a minute counter (up to 30 minutes), hour counter, and small seconds subdial; center-mounted 1/4 of a second chronograph hand; and date window detailing. They can be used to time an event up to 12 hours in duration to the nearest 1/4 of a second.

NOTE: If your watch has a screw-down crown, before you can set the date (Day/Date), time or manual winding, you must first unlock the crown by turning it counterclockwise approximately six rotations. After time/date (Day/ Date) setting, the crown must be screwed back down into the case to ensure water resistance.

To manually wind an automatic movement:
The motion of your arm during normal daily activities should be sufficient to keep the movement of your Movado automatic timepiece wound. However, if you have not worn your watch for 62 hours or more, and the watch has stopped, you will need to wind it by hand before setting the time:

1. With the crown in position 1, turn the crown clockwise approximately 20 revolutions.
2. Reset time following instructions above.

Automatic watches do not contain batteries. They are charged by the movement of your wrist. If the watch is not worn it will stop running in about 62 hours. To get it started, turn the crown clockwise about 20-30 times until second hand starts moving. You will most likely need to reset the time and date.

⑦ AUTOMATIC CHRONOGRAPH 1/4 OF A SECOND – TYPE A

Includes Heritage Super Sub Sea Models

TIME/DATE SETTING

To set the time:

1. Unlock screw-down crown on models with this feature. See "Screw-down Crown" for instructions.
2. Pull crown out to position 3; watch stops.
3. Turn crown in either direction until hands indicate desired time.
4. Push crown back in to position 1; watch restarts.
5. Screw crown back into case on models with screw-down crown.

To adjust the time to the exact second:

1. Unlock screw-down crown on models with this feature.
2. As soon as small seconds hand S reaches <<60>> position, pull crown out to position 3; watch stops.
3. Turn crown to move hands and set time, making sure date changes at midnight, not noon.
4. Move hands slightly ahead of exact time, then slowly turn crown counterclockwise to align minute hand with correct minute marker.
5. Take an accurate time signal (from a radio news station, for example). When audible tone signals exact time, immediately push crown back in to position 1; watch restarts, now set to the exact time.
6. Screw crown back down into case on models with screw-down crown.

To correct the date (quick mode):

1. Pull unlocked crown out to position 2; watch continues to run.
2. Turn crown counter-clockwise until correct date appears in window D.
3. Push crown back in to position 1 and screw back down into case.

NOTE: If a date is adjusted between 9:00PM and 12:00AM when automatic date changes are already in progress, it should be set to the following day: The date will not automatically advance at midnight if it has been corrected via quick mode during these hours.

OPERATING THE CHRONOGRAPH:

Overview:

Use buttons A and B to operate the chronograph. Pressing button A the first time will start the chronograph. Pressing A a second time will stop the chronograph, allowing elapsed time to be read. Pressing button A a third time will restart the chronograph. Pressing button B will reset chronograph hands C, E and F to zero.

Simple chronograph functions:

To measure the duration of a single, non-stop event:

1. Press button A to start chronograph.
2. Press button A a second time to stop chronograph and read the 3 chronograph hands to determine elapsed time, for example: 2 hours, 4 minutes, 38 seconds, 3/4 of-a-second.
3. Press button B to reset chronograph hands to zero.

⑧ QUARTZ CHRONOGRAPH
1/1 OF A SECOND – TYPE A

Includes Series 800 Quartz chronograph & Movado BOLD TR90 chronographs

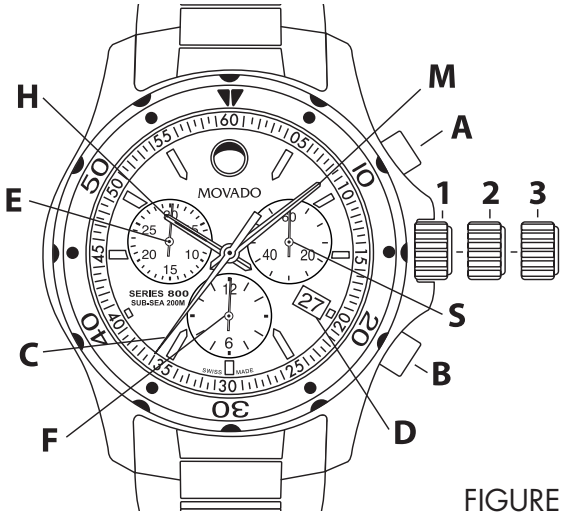

FIGURE A

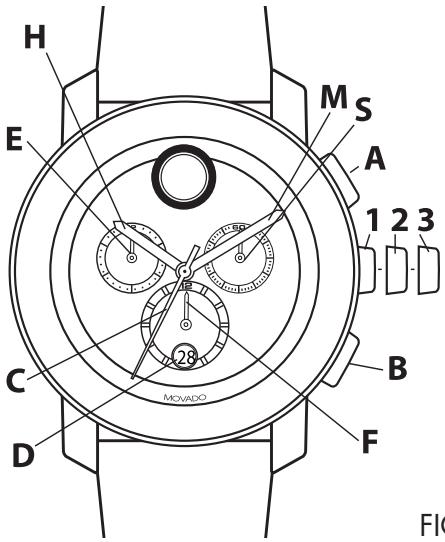

FIGURE B

LEGEND:

H – Hour hand
M – Minute hand
S – Small seconds hand
C – Chronograph 60-seconds counter
E – Chronograph 30-minutes counter
F – Chronograph 12-hours counter
D – Date window
1, 2, 3 – Crown positions
A – Chronograph push-button (start/stop)
B – Chronograph push-button (split-time/reset)

These chronograph models feature a minute counter (up to 30), hour counter, and small seconds subdial; center-mounted chronograph seconds hand; and date or big date window. They can be used to time an event up to 12 hours in duration to the nearest second.

TIME/DATE SETTING

To set the time:

1. Unlock screw-down crown on models with this feature. See "Screw-down Crown" for instructions.
2. Pull crown out to position 3; watch stops.
3. Turn crown in either direction until hands indicate desired time.
4. Push crown back in to position 1; watch restarts.
5. Screw crown back into case on models with screw-down crown.

To adjust the time to the exact second:

1. Unlock crown on models with screw-down crown.
2. As soon as small seconds hand S reaches <<60>> position, pull crown out to position 3; watch stops.
3. Turn crown to move hands and set time, making sure date changes at midnight, not noon.
4. Move hands slightly ahead of exact time, then slowly turn crown counterclockwise to align minute hand with correct minute marker.
5. Take an accurate time signal (from a radio news station, for example). When audible tone signals exact time, immediately push crown back in to position 1; watch restarts, now set to the exact time.
6. Screw crown back down into case on models with screw-down crown.

To correct the date (quick mode):

1. Pull unlocked crown out to position 2; watch continues to run.

2. Turn crown clockwise until correct date appears in window D.
3. Push crown back in to position 1 and screw back down into case.

NOTE: If date is adjusted between 9:00 PM and 12:00 AM when automatic date changes are already in progress, it should be set to the following day: The date will not automatically advance at midnight if it has been corrected via quick mode during these hours.

To set date/time following a battery change:

1. Pull unlocked screw-down crown out to position 2; watch continues to run.
2. Turn crown clockwise until yesterday's date appears in window D.
3. Pull crown out to position 3; watch stops.
4. Turn crown clockwise until today's date appears in window D.
5. Continue to turn crown clockwise until hands indicate correct time.

NOTE: Be sure to take AM/PM into account when setting time.

6. Push crown back in to position 1, and screw back down into case.

CHRONOGRAPH FUNCTIONS

Overview

Use buttons A and B to operate the chronograph. Pressing button A the first time will start the chronograph. Pressing button A a second time will stop the chronograph, allowing elapsed time to be read. Pressing button A a third time will restart the chronograph. Pressing button B will reset chronograph hands C, E and F to zero. Adjusting the time does not stop the chronograph, but it does block buttons A and B for as long as the crown is pulled out.

NOTE: Crown must be in position 1 and hands must be at zero before chronograph is started. Press button B to reset hands to zero.

IMPORTANT: Do not push button A or B when crown is pulled out to position 2 or 3. If button A or B is accidentally activated while crown is not flush against case, one or more of the chronograph hands may become de-synchronized. Should this occur, follow instructions at end for synchronizing chronograph hands.

Simple chronograph functions:

To measure the duration of a single, non-stop event:

1. Press button A to start chronograph.
2. Press button A a second time to stop chronograph, and read the 3 chronograph hands to determine elapsed time, for example: 1 hour, 8 minutes, 47 seconds.
3. Press button B to reset chronograph hands to zero.

Accumulated time functions:

To measure the combined time of a series of shorter events, for example the actual playing time of a football game, where play is repeatedly interrupted:

1. Press button A to start chronograph.
2. Press button A a second time to stop chronograph and read elapsed time, for example: 15 minutes, 22 seconds.
3. Press button A again to resume measurement.
4. Press button A a fourth time to stop chronograph again, and read new elapsed time, for example: 28 minutes, 35 seconds.

NOTE: Each time you stop chronograph, chronograph hands will indicate total accumulated time.

5. Repeat steps 1 and 2 to add each additional interval of time.
6. After you have taken your final accumulated time reading, press button B to reset chronograph hands to zero.

⑧ QUARTZ CHRONOGRAPH
1/1 OF A SECOND – TYPE A

Includes Series 800 Quartz chronograph & Movado BOLD TR90 chronographs

Split-time or intermediate-time functions:
To take intermediate time readings as a race progresses:

1. Press button A to start chronograph.
2. Press button B to momentarily stop chronograph.
3. Read off the intermediate time, for example: 11 minutes, 16 seconds.
4. Press button B to resume chronograph function. The 3 chronograph hands will quickly catch up with ongoing event.
5. To read a second split time, press button B again. Repeat steps 2 through 4 to take any additional split times.
6. Press button A to stop chronograph.
7. Take a reading of the final time, for example: 2 hours, 14 minutes, 7 seconds.
8. Press button B to reset chronograph hands to zero.

Synchronizing chronograph hands:
After a battery change or in the event of an error, you may need to manually adjust one or more of the chronograph hands to align them all correctly at their zero positions.
NOTES: Once in corrective mode, each press and release on push-button A will advance active chronograph hand by one increment. To advance hand rapidly, depress and hold push-button A.
You may exit correction mode at any time in the sequence by returning crown to position 1, and screwing it back down into the case.

1. Pull unlocked screw-down crown out to position 3.
2. Press and hold push-buttons A and B simultaneously for at least 2 seconds to enter corrective mode. When chronograph seconds hand C rotates 360°, corrective mode is activated; release buttons A and B.
3. Adjust center-mounted chronograph seconds hand C using push-button A.
4. When hand C reaches zero position, press push-button B.
5. Now press push-button A to adjust minute counter hand E.
6. When hand E reaches zero position, press push-button B.
7. Use push-button A again to adjust hour counter hand F.
8. When hand F reaches zero position, push crown back in to position 1, and screw back down into case. Timing hands are now synchronized at zero position, and chronograph is ready for use.

⑨ QUARTZ CHRONOGRAPH
1/5 OF A SECOND – TYPE B

Select 38 mm Movado BOLD chronograph models

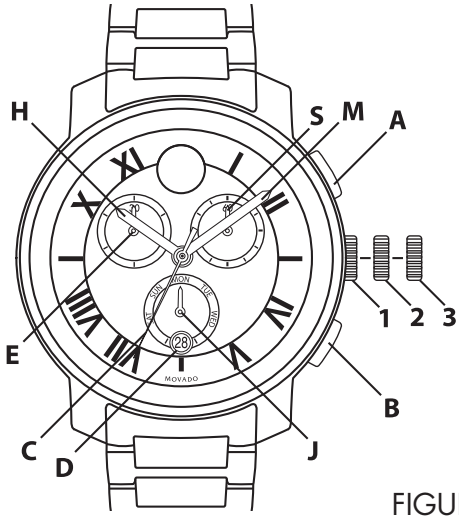

FIGURE A

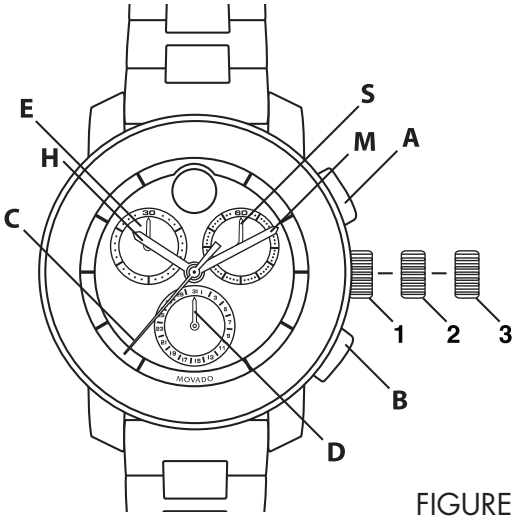

FIGURE B

LEGEND:

H – Hour hand
M – Minute hand
C – Chronograph 1/5 seconds hand
S – Small seconds hand
J – Day Indicator Hand
D – Date Window/Indicator
E – Chronograph 30-minutes counter
1, 2, 3 – Crown positions
A – Start/Stop
B – Reset

These chronograph models feature a center-mounted fifths-of-a-second chronograph hand, a minute counter (up to 30) and small seconds subdials; and day indicator subdial with date window (figure A) or date indicator subdial (figure B). They can be used to time an event up to 30 minutes in duration to the nearest 1/5 of a second.

To set the TIME:

1. Pull crown out to position 3; watch (small seconds hand S) stops.

NOTE: If crown is pulled to position 3 while chronograph is running, timing will stop.

2. Turn crown in either direction to set hour H and minute M hands to desired time taking AM/PM into account.
3. Push crown back in to position 1; watch restarts.

To set the DAY (select models, Figure A):

1. Pull crown out to position 3.
2. Turn crown in either direction to set weekday: Day indicator hand J will advance or move back by one day each time hour H and minute M hands pass midnight (24:00).
3. Once hand J indicates correct day, continue turning crown to set hour H and minute M hands to desired time, taking AM/PM into account.
4. Push crown back in to position 1.

To set the DATE:

1. Pull crown out to position 2.
2. Turn crown clockwise (Figure A) or counterclockwise (Figure B) to set date D.

CAUTION: Do not set date D when hour and minute hands are between 9:00 PM and 12:30 AM; doing so could damage the calendar mechanism. If you must reset date during those hours, first move hour and minute hands to any time outside that period, reset the date, and then reset hands to correct time.

3. Push crown back in to position 1.

⑨ QUARTZ CHRONOGRAPH 1/5 OF A SECOND – TYPE B

Select 38 mm Movado BOLD chronograph models

To operate the CHRONOGRAPH:
This chronograph is able to measure and display time in 1/5-of-a-second increments up to a maximum of 2 hours (4 revolutions of the 30-minute counter). To save battery life, the chronograph will stop and reset automatically after 2 hours of continuous running.

Simple chronograph functions:
1. Press button A to start chronograph; chronograph hands C and E start moving.
2. Press button A a second time to stop chronograph; read elapsed time indicated by hands C and E.
3. Press button B to reset chronograph hands to zero.

Accumulated time functions:
To measure the combined time of a series of shorter events, for example the actual playing time of a football game, where play is repeatedly interrupted:
1. Press button A to start chronograph.
2. Press button A a second time to stop chronograph and read elapsed time.
3. Press button A again to resume measurement.
4. Press button A a fourth time to stop chronograph again, and read new elapsed time.

NOTE: Each time you stop chronograph, chronograph hands will indicate total accumulated elapsed time.

5. Repeat steps 1 and 2 to add each additional interval of time.
6. After you have taken your final accumulated time reading, press button B to reset chronograph hands to zero.

Split-time or intermediate-time functions:
To take intermediate time readings as a race progresses:
1. Press button A to start chronograph.
2. Press button B to momentarily stop chronograph.
3. Read off the intermediate time, for example: 11 minutes, 16.4 seconds.
4. Press button B to resume chronograph function. The 2 chronograph hands will quickly catch up with ongoing event.
5. To read a second split time, press button B again.

Repeat steps 2 through 4 to take any additional split times.

6. Press button A to stop chronograph.
7. Take a reading of the final time, for example: 24 minutes, 7.2 seconds.
8. Press button B to reset chronograph hands to zero.

To RESET Chronograph Hands:
After changing the battery, or in the event of an error, the chronograph hands can be realigned to zero if needed:
NOTE: To advance hands rapidly, press push buttons and hold longer than one second.

Crown position 2:
Adjust minute-counter hand E using button B.

Crown position 3:
Adjust chronograph fifths-of-a-second hand C using button A.

⑩ QUARTZ CHRONOGRAPH
1/10 OF A SECOND – TYPE B

Select Vizio Quartz chronographs

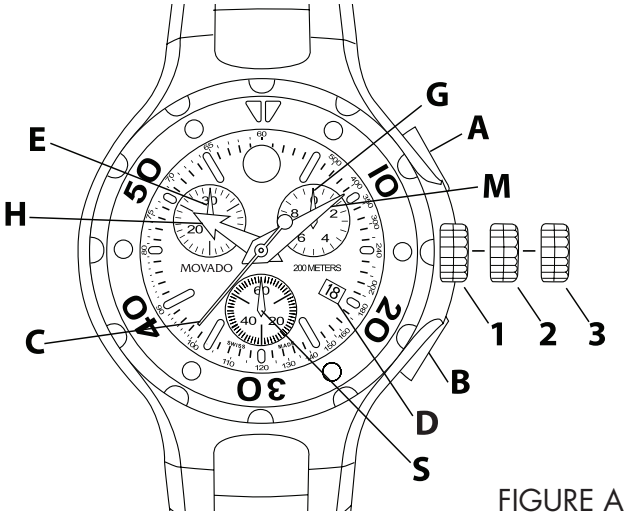

FIGURE A

LEGEND:
H – Hour hand
M – Minute hand
C – Chronograph seconds hand
E – Chronograph 30-minutes counter
G – Chronograph tenths-of-a-second counter
S – Small seconds hand
D – Date window
1, 2, 3 – Crown positions
A – Chronograph push-button (start/stop)
B – Chronograph push-button (split-time/reset)

These quartz chronograph models feature a tenths-of-a-second counter, minute counter (up to 30), and small seconds subdials; center-mounted chronograph seconds hand; and date window. They can be used to time an event up to 29 minutes and 59.9 seconds in duration to the nearest 1/10 of a second.

TIME/DATE SETTING

To adjust the time:

1. First unlock screw-down crown; some models only. See "Screw-down Crown" for instructions.
2. As soon as small seconds hand S reaches <<60>> position, pull crown out to position 3; watch stops.
3. Turn crown to move hands and set time, making sure date changes at midnight, not noon.
4. Move hands slightly ahead of exact time, then slowly turn crown counterclockwise to align minute hand M with correct minute marker.
5. Take an accurate time signal (from a radio news station, for example). When audible tone signals exact time, push crown back in to position 1; watch will restart, now set to the exact time.
6. Screw crown back down into case; some models only. See "Screw-down Crown" for instructions.

To correct time zone and date:

1. Pull crown or unlocked screw-down crown out to position 2.
2. Turn crown to move hour hand H ahead or back after crossing into another zone, or to correct for daylight savings/standard time change.
3. To change date D, advance hour hand H by two complete revolutions, otherwise date will change at noon. These adjustments will not stop the watch and do not affect the time indicated by the minute and seconds hands.
4. Once adjustments have been made, return crown to position 1 immediately, then screw crown back down into case on select models.

CHRONOGRAPH FUNCTIONS

Overview

Use buttons A and B to operate the chronograph. Pressing button A the first time will start the chronograph. While the chronograph is running, once the chronograph seconds counter hand C has completed one turn, minute-counter hand E will jump ahead one minute. Tenths-of-a-second hand G does not move when the chronograph is running. Pressing button A a second time will stop the chronograph and move hand G to the relevant

⑩ QUARTZ CHRONOGRAPH
1/10 OF A SECOND – TYPE B

Select Vizio Quartz chronographs

tenth-of-a-second mark. Pressing button B will reset hands G, E and C to zero. Adjusting the time does not stop the chronograph, but it does block buttons A and B for as long as the crown is pulled out. IMPORTANT: Crown must be in position 1 and hands must be at zero before chronograph is started. Press button B to reset hands to zero. DO NOT push button A or B while crown is pulled to position 2 or 3. If button A or B is accidentally activated while crown is not flush against case, one or more of the chronograph hands will become de-synchronized. Should this occur, follow instructions below.

Synchronization of chronograph hands:
After changing the battery, or in the event of an error, the chronograph hands can be realigned to zero if needed. A single push (quick press and release) will advance hands by one increment. To advance hands rapidly, depress and hold push buttons for longer than one second.

Crown position 2:
Adjust minute-counter hand E using button B.

Crown position 3:
Adjust chronograph seconds hand C using button A. Adjust tenths-of-a-second hand G using button B.

OPERATING THE CHRONOGRAPH

Simple chronograph functions:
1. Press button A to start chronograph.
2. Press button A a second time to stop chronograph.
3. Press button B to reset chronograph to zero.

Accumulated time functions:
1. Press button A to start chronograph.
2. Press button A a second time to stop chronograph.
3. Press button A again to resume measurement.
4. Press button A a fourth time to stop chronograph again.

NOTE: Each time you stop chronograph, chronograph hands will indicate total accumulated time.

5. Repeat steps 1 and 2 to add each additional interval of time.
6. After you have taken your final accumulated time reading, press button B to reset chronograph hands to zero.

Split-time or intermediate time functions:
You can take intermediate time readings as a race progresses with these models:
1. Press button A to start chronograph.
2. Press button B to momentarily stop chronograph.
3. Read off the intermediate time, for example: 10 minutes, 26 seconds, 3/10 of a second.
4. Press button B to resume chronograph function. Hands will catch up with ongoing event.
5. To read a second split time, press button B again. Repeat steps 2 through 4 to take any additional split times.
6. Press button A to stop chronograph.
7. Take a reading of the final time, for example: 27 minutes, 3 seconds, 7/10 seconds.
8. Press button B to reset chronograph hands to zero.

First place and runner-up results:
These chronograph models also allow you to measure both a winning time and runner-up results:
1. Start chronograph by pressing button A.
2. As soon as winner crosses finish line, press button B. Chronograph will stop.
3. When second runner crosses finish line, press button A.
4. Note time for the winner as shown on the dial.
5. Press button B; hands will move up to indicate time for the runner-up.
6. Press button B again to return all hands to zero.

⑪ QUARTZ CHRONOGRAPH
1/10 OF A SECOND – TYPE C

Includes Movado Heritage Series Circa

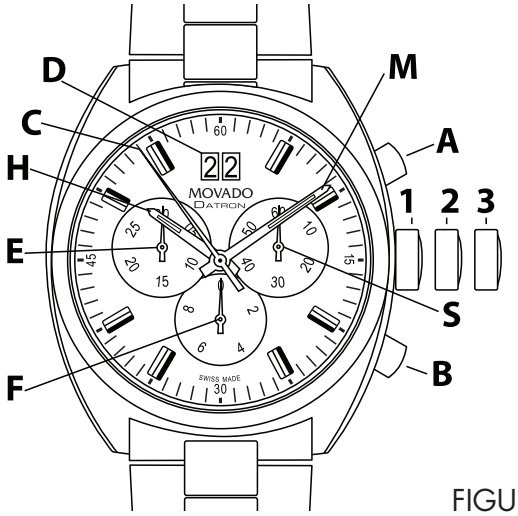

FIGURE A

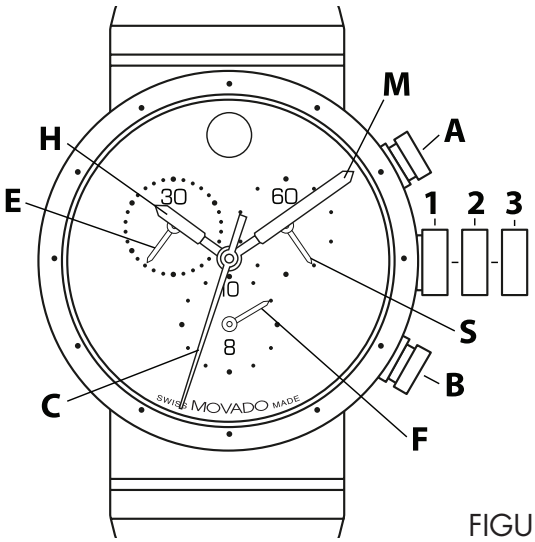

FIGURE B

LEGEND:

H – Hour hand
M – Minute hand
S – Small seconds hand
C – Chronograph 60-seconds counter
E – Chronograph 30-minutes counter
F – Chronograph tenths-of-a-second counter
D – Big Date window
1, 2, 3 – Crown positions
A – Chronograph push-button (start/stop)
B – Chronograph push-button (split-time/reset)

These chronograph models feature a minute counter (up to 30), tenths-of-a-second counter which becomes an hour counter after 30 minutes, and small seconds hand subdials, and center-mounted chronograph seconds hand; some have a Big Date feature. They can be used to time an event up to 29 minutes and 59.9 seconds in duration to the nearest 1/10 of a second; or up to 9 hours, 59 minutes and 59 seconds in duration to the nearest full second.

TIME/DATE SETTING

To set the time:

1. Pull crown out to position 3; watch stops.
2. Turn crown in either direction until hands indicate desired time.
3. Push crown back in to position 1; watch restarts.

To adjust the time to the exact second:

1. As soon as small seconds hand S reaches <<60>> position, pull crown out to position 3; watch stops.
2. Turn crown to move hands and set time, making sure date changes at midnight, not noon.
3. Move hands slightly ahead of exact time, then slowly turn crown counterclockwise to align minute hand with correct minute marker.
4. Take an accurate time signal (from a radio news station, for example). When audible tone signals exact time, immediately push crown back in to position 1; watch will restart, now set to the exact time.

To correct the Big Date (quick mode):

Only for models with Big Date feature at 12 o'clock (see *Figure A*)

1. Pull crown out to position 2; watch continues to run.
2. Turn crown clockwise until correct date appears in big date window D.

3. Push crown back in to position 1.

NOTES: If date is adjusted between 9:00 PM and 12:00 AM when automatic date changes are already in progress, it should be set to the following day: The date will not automatically advance at midnight if it has been corrected via quick mode during these hours.

If crown is turned too rapidly during quick mode date setting, the date may not change properly at midnight. To correct the date manually, pull crown out to position 2, turn it clockwise until correct date appears in window; then return it to position 1.

Setting date/time following a battery change:

For models without date, follow *To set the time* instructions above.

For models with Big Date feature at 12 o'clock (*see Figure A*):

1. Pull crown out to position 2; watch continues to run.
2. Turn crown clockwise until yesterday's date appears in window D.
3. Pull crown out to position 3; watch stops.
4. Turn crown clockwise until today's date appears in window D.
5. Continue to turn crown clockwise until hands indicate correct time.

NOTE: Be sure to take AM/PM into account when setting time.

6. Push crown back in to position 1.

CHRONOGRAPH FUNCTIONS

Overview

Use buttons A and B to operate the chronograph. Pressing button A the first time will start the chronograph. Pressing button A a second time will stop the chronograph, allowing elapsed time to be read. Pressing button A a third time will restart the chronograph. Pressing button B will reset chronograph hands C, E and F to zero. Adjusting the time does not stop the chronograph, but it does block buttons A and B for as long as the crown is pulled out.

NOTE: Crown must be in position 1 and hands must be at zero before chronograph is started. Press button B to reset hands to zero.

IMPORTANT: Do not push button A or B when crown is pulled out to position 2 or 3. If button A or B is accidentally activated while crown is not flush against case, one or more of the chronograph hands may become de-synchronized. Should this occur, follow instructions at end for synchronizing chronograph hands.

Simple chronograph functions:

To measure the duration of a single, non-stop event:

1. Press button A to start chronograph.
2. Press button A a second time to stop chronograph, and read the 3 chronograph hands to determine elapsed time, for example: 4 minutes, 38 seconds, 7/10-of-a-second.
3. Press button B to reset chronograph hands to zero.

Accumulated time functions:

To measure the combined time of a series of shorter events, for example the actual playing time of a football game, where play is repeatedly interrupted:

1. Press button A to start chronograph.
2. Press button A a second time to stop chronograph and read elapsed time, for example: 15 minutes, 5 seconds.
3. Press button A again to resume measurement.
4. Press button A a fourth time to stop chronograph again, and read new elapsed time, for example: 28 minutes, 10 seconds.

⑪ QUARTZ CHRONOGRAPH
1/10 OF A SECOND – TYPE C

Includes Movado Heritage Series Circa, Museum Sport

NOTE: Each time you stop chronograph, chronograph hands will indicate total accumulated time.

5. Repeat steps 1 and 2 to add each additional interval of time.
6. After you have taken your final accumulated time reading, press button B to reset chronograph hands to zero.

Split-time or intermediate-time functions:

To take intermediate time readings as a race progresses:

1. Press button A to start chronograph.
2. Press button B to momentarily stop chronograph.
3. Read off the intermediate time, for example: 10 minutes, 10 seconds.
4. Press button B to resume chronograph function. The 3 chronograph hands will quickly catch up with ongoing event.
5. To read a second split time, press button B again. Repeat steps 2 through 4 to take any additional split times.
6. Press button A to stop chronograph.
7. Take a reading of the final time, for example: 2 hours, 14 minutes, 7 seconds.
8. Press button B to reset chronograph hands to zero.

Synchronizing chronograph hands:

After a battery change or in the event of an error, you may need to manually adjust one or more of the chronograph hands to align them all correctly at their zero positions.

NOTES: Once in corrective mode, each press and release on push-button A will advance active chronograph hand by one increment. To advance hand rapidly, depress and hold push-button A. You may exit correction mode at any time in the sequence by returning crown to position 1.

1. Pull crown out to position 3.
2. Press and hold push-buttons A and B simultaneously for at least 2 seconds to enter corrective mode. When chronograph seconds hand C rotates 360°, corrective mode is activated; release buttons A and B.
3. Adjust center-mounted chronograph seconds hand C using push-button A.
4. When hand C reaches zero position, press push-button B.
5. Now press push-button A to adjust tenths-of-a-second chronograph hand F.
6. When hand F reaches zero position, press push-button B.
7. Use push-button A again to adjust minute counter hand E.
8. When hand E reaches zero position, push crown back in to position 1. Timing hands are now synchronized at zero position, and chronograph is ready for use.

⑫ QUARTZ CHRONOGRAPH
1/10 OF A SECOND – TYPE D

Select 38 mm Movado BOLD Quartz chronographs

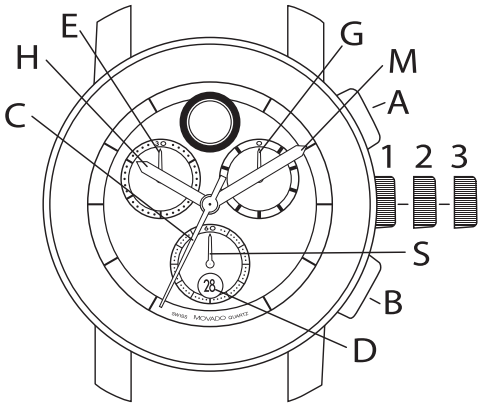

FIGURE A

LEGEND:
H – Hour hand
M – Minute hand
C – Chronograph seconds hand
E – Chronograph 30-minutes counter
G – Chronograph tenths-of-a-second counter
S – Small seconds hand
D – Date window
1, 2, 3 – Crown positions
A – Chronograph push-button (start/stop)
B – Chronograph push-button (split-time/reset)

These quartz chronograph models feature a tenths-of-a-second counter, minute counter (up to 30), and small seconds subdials; center-mounted chronograph seconds hand; and date window. They can be used to time an event up to 30 minutes and 60 seconds in duration to the nearest 1/10 of a second.

TIME/DATE SETTING

To set the time:

1. Pull crown out to position 3; watch stops.
2. Turn crown in either direction until hands indicate desired time – check that the date changes at midnight, not at noon.

NOTE: Date D will advance by one each time hour hand H completes two clockwise revolutions, passing midnight.

3. Push crown back in to position 1; watch restarts.

To adjust the date rapidly using crown:

1. Pull crown out to position 2; watch stops.
2. Turn crown counterclockwise to advance date.
3. When correct date is displayed in window D, push crown back in to position 1; watch restarts.

CHRONOGRAPH FUNCTIONS

Overview

Use buttons A and B to operate the chronograph. Pressing button A the first time will start the chronograph. While the chronograph is running, once the chronograph seconds counter hand C has completed one turn, minute-counter hand E will jump ahead one minute. Tenths-of-a-second hand G does not move when the chronograph is running. Pressing button A a second time will stop the chronograph and move hand G to the relevant tenth-of-a-second mark. Pressing button B will reset hands G, E and C to zero. Adjusting the time does not stop the chronograph, but it does block buttons A and B for as long as the crown is pulled out. IMPORTANT: Crown must be in position 1 and hands must be at zero before chronograph is started. Press button B to reset hands to zero. DO NOT push button A or B while crown is pulled to position 2 or 3. If button A or B is accidentally activated while crown is not flush against case, one or more of the chronograph hands will become de-synchronized. Should this occur, follow instructions below.

Synchronization of chronograph hands:

After changing the battery, or in the event of an error, the chronograph hands can be realigned

to zero if needed. A single push (quick press and release) will advance hands by one increment. To advance hands rapidly, depress and hold push buttons for longer than one second.

Crown position 2:
Adjust minutes-counter hand E using button B.

Crown position 3:
Adjust chronograph seconds hand C using button A.
Adjust tenths-of-a-second hand G using button B.

OPERATING THE CHRONOGRAPH

Simple chronograph functions:
1. Press button A to start chronograph.
2. Press button A a second time to stop chronograph; read time.
3. Press button B to reset chronograph to zero.

Accumulated time functions:
1. Press button A to start chronograph.
2. Press button A a second time to stop chronograph.
3. Press button A again to resume measurement.
4. Press button A a fourth time to stop chronograph again.

NOTE: Each time you stop chronograph, chronograph hands will indicate total accumulated time.

5. Repeat steps 1 and 2 to add each additional interval of time.
6. After you have taken your final accumulated time reading, press button B to reset chronograph hands to zero.

Split-time or intermediate time functions:
You can take intermediate time readings as a race progresses with these models:
1. Press button A to start chronograph.
2. Press button B to momentarily stop chronograph.
3. Read off the intermediate time, for example: 10 minutes, 26 seconds, 3/10 of a second.
4. Press button B to resume chronograph function. Hands will catch up with ongoing event.
5. To read a second split time, press button B again.

Repeat steps 2 through 4 to take any additional split times.

6. Press button A to stop chronograph.
7. Take a reading of the final time, for example: 27 minutes, 3 seconds, 7/10 seconds.
8. Press button B to reset chronograph hands to zero.

⑬ QUARTZ CHRONOGRAPH
1/1 OF A SECOND – TYPE C

Includes BOLD Quest Chrono and Movado Heritage Series Calendoplan chronograph

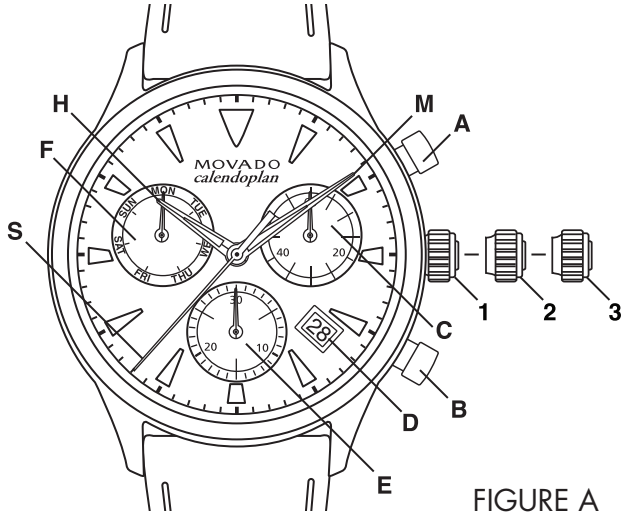

FIGURE A

LEGEND:

H – Hour hand
M – Minute hand
S – Seconds hand
C – Chronograph seconds counter
E – Chronograph 30-minutes counter
F – Day of week indicator
D – Date window
1, 2, 3 – Crown positions
A – Chronograph push-button (start/stop)
B – Chronograph push-button (split-time/reset)

These chronograph models feature a center-mounted chronograph seconds hand; minute counter (up to 30) subdial, small seconds subdial, day of week indicator subdial; and date window. They can be used to time an event up to 30 minutes in duration to the nearest second.

TIME/DATE SETTING

To set the time:

1. Pull crown out to position 3; watch stops.
2. Turn crown in either direction until hands indicate desired time.
3. Push crown back in to position 1; watch restarts.

To set the time to the exact second:

1. As soon as small seconds hand S reaches the <<60>> position, pull crown out to position 3; watch stops.
2. Turn crown in either direction to move hands and set time, making sure date changes at midnight, not noon.
3. Move hands slightly ahead of exact time, then slowly turn crown counterclockwise to align minute hand with correct minute marker.
4. Take an accurate time signal (from a radio news station, for example). When audible tone signals exact time, immediately push crown back in to position 1; watch restarts, now set to the exact time.

To correct the date (quick mode):

1. Pull unlocked crown out to position 2; watch continues to run.
2. Turn crown counterclockwise until correct date appears in window D.
3. Push crown back in to position 1.

NOTE: If date is adjusted between 9:45 PM and 12:00 AM when automatic date changes are already in progress, it should be set to the following day: The date will not automatically advance at midnight if it has been corrected via quick mode during these hours.

To set date, day of week and time:

Example: Date/Time on the watch reads:
[17] 01:25 / MON and present Date/Time are:
[23] 20:35 / THU

1. Pull crown out to position 3; watch stops.
2. Turn crown counterclockwise until yesterday's day of week (WED) is indicated by subdial hand F.
3. Push crown in to position 2.
4. Continue to turn crown counterclockwise until yesterday's date (22) appears in window D.

5. Pull crown out to position 3; watch stops.
6. Turn crown counterclockwise until correct date (23) appears in window D and correct day of week (THU) is indicated by subdial hand F.
7. Continue to turn crown counterclockwise until hour and minute hands indicate correct time (8:35 PM), being sure to take AM/PM time into account.
8. Push crown back in to position 1, and screw back down into case.

CHRONOGRAPH FUNCTIONS

Overview

Use buttons A and B to operate the chronograph. Pressing button A the first time will start the chronograph. Pressing button A a second time will stop the chronograph, allowing elapsed time to be read. Pressing button A a third time will restart the chronograph. Pressing button B will reset chronograph hands C and E to zero. Adjusting the time does not stop the chronograph, but it does block buttons A and B for as long as the crown is pulled out.

NOTE: Crown must be in position 1 and hands must be at zero before chronograph is started. Press button B to reset hands to zero.

IMPORTANT: Do not push button A or B when crown is pulled out to position 2 or 3. If button A or B is accidentally activated while crown is not flush against case, one or more of the chronograph hands may become de-synchronized. Should this occur, follow instructions at end for synchronizing chronograph hands.

Simple chronograph functions:

To measure the duration of a single, non-stop event:

1. Press button A to start chronograph.
2. Press button A a second time to stop chronograph, and read the 2 chronograph hands to determine elapsed time, for example: 20 minutes, 38 seconds.
3. Press button B to reset chronograph hands to zero.

Accumulated time functions:

To measure the combined time of a series of shorter events, for example the actual playing time of a football game, where play is repeatedly interrupted:

1. Press button A to start chronograph.
2. Press button A a second time to stop chronograph and read elapsed time, for example: 15 minutes, 5 seconds.
3. Press button A again to resume measurement.
4. Press button A a fourth time to stop chronograph again, and read new elapsed time, for example: 20 minutes, 17 seconds.

NOTE: Each time you stop chronograph, chronograph hands will indicate total accumulated time.

5. Repeat steps 1 and 2 to add each additional interval of time.
6. After you have taken your final accumulated time reading, press button B to reset chronograph hands to zero.

Split-time or intermediate-time functions:

To take intermediate time readings as a race progresses:

1. Press button A to start chronograph.
2. Press button B to momentarily stop chronograph.
3. Read off the intermediate time, for example: 20 minutes, 17 seconds.
4. Press button B to resume chronograph function. The 2 chronograph hands will quickly catch up with ongoing event.

5. To read a second split time, press button B again.

Repeat steps 2 through 4 to take any additional split times.

6. Press button A to stop chronograph.
7. Take a reading of the final time, for example: 29 minutes, 7 seconds.
8. Press button B to reset chronograph hands to zero.

Synchronizing chronograph hands:

After a battery change or in the event of an error, you may need to manually adjust one or both of the chronograph hands to align them correctly at their zero positions.

NOTES: Once in corrective mode, each press and release on push-button A will advance active chronograph hand by one increment. To advance hand rapidly, depress and hold push-button A. You may exit correction mode at any time in the sequence by returning crown to position 1.

1. Pull crown out to position 3.
2. Press and hold push-buttons A and B simultaneously for at least 2 seconds to enter corrective mode. When chronograph seconds hand C rotates 360°, corrective mode is activated; release buttons A and B.
3. Adjust center-mounted chronograph seconds hand C using push-button A.
4. When hand C reaches zero position, press push-button B.
5. Now press push-button A to adjust minute counter hand E.
6. When hand E reaches zero position, press push-button B.
7. Push crown back in to position 1.

Timing hands are now synchronized at zero position, and chronograph is ready for use.

SPECIAL FEATURES
Ⓐ ROTATING BEZEL

Select Movado sport models feature a unidirectional bezel for measuring elapsed time. The engraved bezel turns counterclockwise only. It can be used, for example, to monitor the number of minutes that have passed on a timed snorkel expedition or similar group excursion:

1. Align the arrow marker on the bezel with the current position of the minute hand.
2. As the minute hand advances around the dial, the number it points to on the bezel indicates how many minutes (1 to 59) have passed since you began the timing.
3. When not in use, turn bezel counterclockwise until marker is aligned at 12 o'clock.

SPECIAL FEATURES
Ⓑ SCREW-DOWN CROWN

Many Movado sport watches and chronographs are equipped with a special screw-down crown that helps seal the case against water and moisture. Before attempting to set the time or date, you must first unlock the screw-down crown by turning it counterclockwise until it loosens (approximately six rotations).

After your watch has been set to the correct time and date following the instructions provided, the crown must be screwed back down into the case to ensure water resistance:

1. Return the crown to position 1, flush against case.
2. Turn the crown clockwise while gently pressing in on it.
3. Continue to turn the crown until you feel resistance. Do not over-tighten.

SPECIAL FEATURES
© ROTATING REFLECTOR RING

Select Movado BOLD models feature a rotating reflector ring for measuring elapsed time. Located under the crystal and controlled by a screw-down crown at 2 o'clock, the reflector ring can be used to monitor the number of minutes that have elapsed on a timed excursion – for example, since you put money in a parking meter:

1. Unlock the screw-down reflector ring crown by pressing on it gently while turning it counterclockwise approximately six rotations until it pops out.
2. Turn the crown in either direction to align the reflector ring's arrow marker with the current position of the minute hand on the watch dial.
3. Screw the reflector ring crown back down into the case by turning clockwise while gently pressing in on it until you feel resistance. Do not over-tighten.
4. As the minute hand advances around the dial, the number it points to on the reflector ring indicates how many minutes (1 to 59) have passed since you began the timing.
5. When not in use, realign the reflector ring arrow at 12 o'clock, being sure to screw the reflector ring crown back down into the case to assure water resistance.

SPECIAL FEATURES
Ⓓ INTERCHANGEABLE STRAPS

Includes Movado Heritage Series models

The straps on select Movado watches are easy to interchange using the Strap Tool that comes with an accessory strap purchase on Movado.com. Spring-bar or tension-style pins with narrow tips and a wider, compressible middle section attach these straps to the watch case via tiny holes in the lugs.

The forked end of the Strap Tool is used to apply pressure to the wider portion of the pin to compress it for strap removal or attachment. The pointed end is used to push the pin out of one strap so it can be used with a new one.

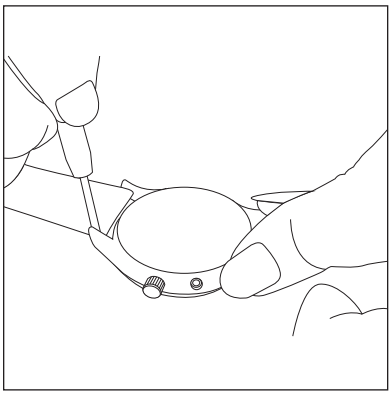

Figure A

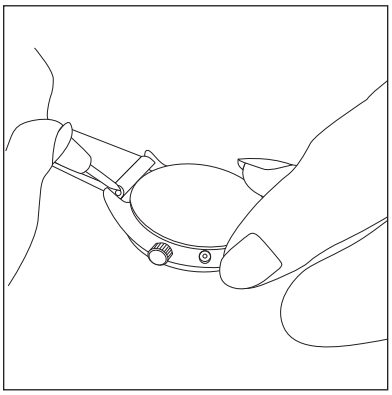

Figure B

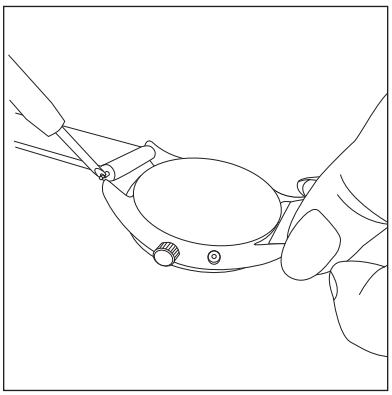

Figure C

To remove a strap:

1. With the watch facing down on a cloth or soft surface to prevent scratching, firmly but carefully insert the fork end of the Strap Tool between the watch lug and the strap. *Figure A.*
2. Apply sideways pressure to compress the pin toward the center of the strap. *Figure B.*
3. When the tip of the pin is free from the hole in the lug on that side, gently maneuver the strap down until it clears the case. The other end of the pin should then pop out easily from hole in the opposite lug, freeing the strap from the watch case. *Figure C.*

Repeat steps above to remove the other half of the strap.

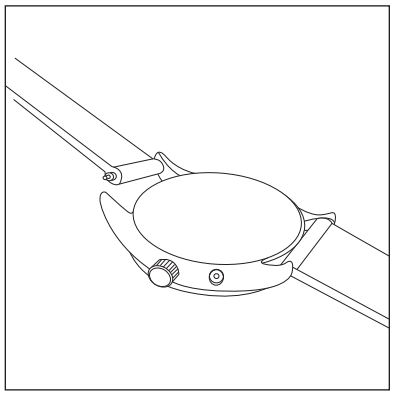

Figure D

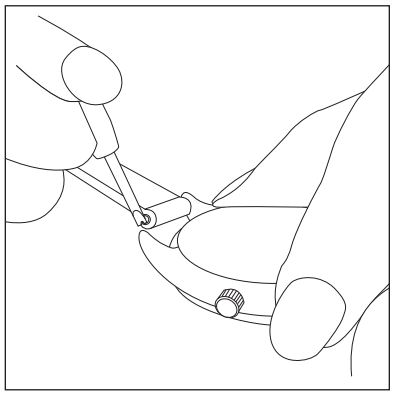

Figure E

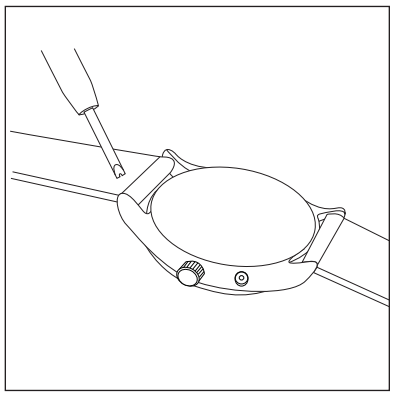

Figure F

To attach a strap:

NOTES: The buckle end of the strap should be attached to the top or 12 o'clock side of the case.

If necessary, use the pointed end of the Strap Tool to remove a pin from one strap, and center it properly in a new one.

1. Place the watch head face down on a cloth or soft surface to prevent scratching.
2. With the strap half facing down, insert one tip of the pin into the lug hole. *Figure D.*
3. Using the fork end of the Strap Tool to apply gentle pressure to the free edge of the strap, compress the spring-bar pin toward the center of the strap. *Figure E.*
4. Maneuver the strap into position between the two lugs and slowly release pressure, guiding the remaining pin tip into the lug hole on that side. *Figure F.*
5. Tug gently on the strap to make sure both ends of the spring-bar pin are properly seated in the lug holes.

Repeat steps above to attach the other half of the strap.

SPECIAL FEATURES
Ⓔ MESH BRACELET SIZING

The mesh bracelets found on select models feature a hooking jewelry clasp that allows you to size the bracelet by sliding the pin-bar half of the clasp along the bracelet to achieve a customized fit.

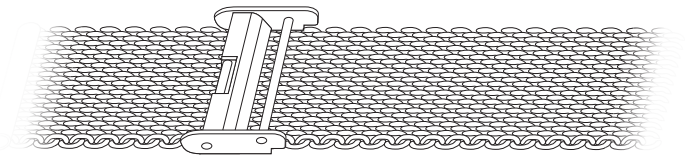

Above: Open mesh bracelet side with pin-bar half of sliding clasp locked in position.

To size the bracelet:

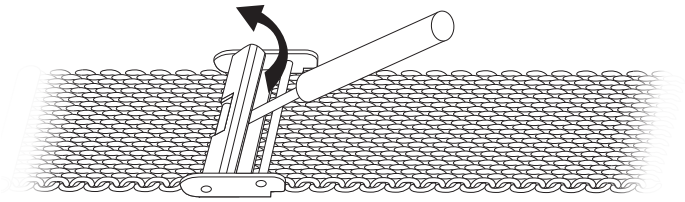

1. Use tool such as a small flat-head screwdriver to pop open metal plate on pin-bar half of clasp, releasing the clasp position locking mechanism.

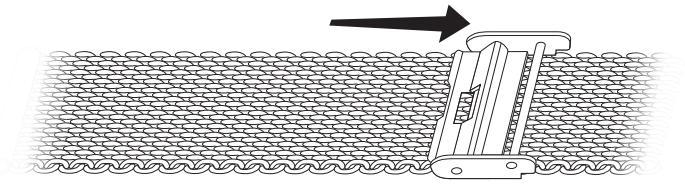

2. Slide pin-bar half of clasp along the mesh bracelet in either direction to desired position.

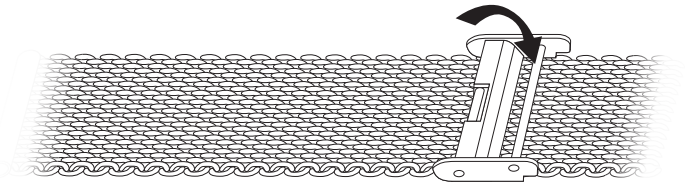

3. Close metal plate, locking the pin-bar half of the clasp in new
position on the bracelet.

QUARTZ WATCH LABELING GUIDANCE FOR COMPLIANCE WITH REESE'S LAW

⚠ WARNING

- **INGESTION HAZARD:** This product contains a button cell or coin battery.
- **DEATH** or serious injury can occur if ingested in as little as **2 hours**.
- A swallowed button cell or coin battery can cause **Internal Chemical Burns**.
- KEEP new and used batteries **OUT OF REACH OF CHILDREN**
- **Seek immediate medical attention** if a battery is suspected to be swallowed or inserted inside any part of the body.
- For treatment information call: 1-(800) 498-8666

User Manual: The user manual must include the above warning label as well as the below text:

- Remove and immediately recycle or dispose of used batteries according to local regulations and keep away from children. Do NOT dispose of batteries in household trash or incinerate.
- Even used batteries may cause severe injury or death.
- Non-rechargeable batteries are not to be recharged.
- Do not force discharge, recharge, disassemble, heat above 122 degrees Fahrenheit or incinerate. Doing so may result in injury due to venting, leakage or explosion resulting in chemical burns.
- Ensure the batteries are installed correctly according to polarity (+ and -).
- Do not mix old and new batteries, different brands or types of batteries, such as alkaline, carbon-zinc, or rechargeable batteries.
- Remove and immediately recycle or dispose of batteries from equipment not used for an extended period of time according to local regulations.
- Always completely secure the battery compartment. If the battery compartment does not close securely, stop using the product, remove the batteries, and keep them away from children.
- This watch uses one of the following battery types:

Battery Type	Nominal Voltage	Battery Chemistry
315	1.55	Silver Oxide
317	1.55	Silver Oxide
321	1.55	Silver Oxide
335	1.55	Silver Oxide
337	1.55	Silver Oxide
341	1.55	Silver Oxide
346	1.55	Silver Oxide
357	1.55	Silver Oxide
362	1.55	Silver Oxide
364	1.55	Silver Oxide
370	1.55	Silver Oxide
371	1.55	Silver Oxide
373	1.55	Silver Oxide
376	1.55	Silver Oxide

Battery Type	Nominal Voltage	Battery Chemistry
377	1.55	Silver Oxide
379	1.55	Silver Oxide
381	1.55	Silver Oxide
384	1.55	Silver Oxide
390	1.55	Silver Oxide
394	1.55	Silver Oxide
395	1.55	Silver Oxide
397	1.55	Silver Oxide
399	1.5	Silver Oxide
382428A	3.7	Manganese Titanium Rechargeable Lithium
APP00236	3.8	Manganese Titanium Rechargeable Lithium
CR1632	3	Lithium Manganese Dioxide
CR2016	3	Lithium Manganese Dioxide
CR2025	3	Lithium Manganese Dioxide
CR2032	3	Lithium Manganese Dioxide
CR2320	3	Lithium Manganese Dioxide
CR2430	3	Lithium Manganese Dioxide
CR2450	3	Lithium Manganese Dioxide
LR41	1.5	Manganese Dioxide
MT621-3026/24T	1.5	Manganese Titanium Rechargeable Lithium
MT920	1.5	Manganese Titanium Rechargeable Lithium
TS920-3023/34R	1.5	Lithium Rechargeable Battery

** Note that the "Battery Chemistry" column is not required under Reese's Law but has been added for purposes of the California battery-embedded products waste regulation.*

For additional battery information, please visit https://repairs.mgiservice.com/battery-regulation/#/.

OBTAINING SERVICE

Should your Movado watch require service or repair, you may take or send it to any Movado Authorized Service Center. For the most current and complete worldwide listing, visit https://repairs.mgiservice.com/movado.

PACKING AND MAILING INSTRUCTIONS

Be sure to include your complete return address and phone number along with a brief note describing the problem with your watch and/or service needed. List all the items you would like to have serviced or repaired.

Your watch should be packed securely in padded wrapping materials, for protection against shock, in a sturdy box sealed with tape. Do not use your watch's original gift box for shipping.

We recommend that you use registered mail and insure your watch for its full replacement value.

TRACKING SERVICE ONLINE

In the US, when you send your watch directly to Movado in Moonachie, New Jersey, for service, we will send you a written acknowledgement that includes a personal User ID and Password. With them, you may authorize and track the status of your watch service online via our secure internet site: https://repairs.mgiservice.com/movado.

SERVICE UNDER WARRANTY

Your Movado timepiece is protected from the date of purchase by a two-year limited warranty. To obtain service under the warranty, you must present valid proof of purchase. See "Warranty Information" for details.
NOTE: Movado is not to be held liable for any incidental or consequential damages occurring from the failure or malfunction of its product.

WARRANTY INFORMATION

Not only is each Movado watch beautiful in design, it is crafted with quality materials and components to offer precise, reliable performance. We proudly stand behind every Movado watch we sell.

MOVADO LIMITED WARRANTY

Movado warrants to the original consumer that, for a period of two (2) years from the date of purchase, your watch will be free from defects in materials and workmanship that prevent the watch from functioning properly under normal use.

Our responsibility for defects covered by this warranty is limited to repairing or (at the sole discretion of Movado) replacing the defective watch, free of charge.

This limited warranty does not cover analog batteries, straps, bracelets, crystals, gold- or ionic-plating or PVD finishing, cosmetic issues such as scratches or normal wear and tear, or any damage arising from accidents or misuse, or from any alteration, service or repair performed by any party other than a Movado Authorized Service Center.

This warranty is void if the timepiece was not purchased from an Authorized Movado Dealer, as evidenced by valid proof of purchase – a dated sales or gift receipt showing the name of the retailer and an identifying style number for the Movado watch.

Any other warranty provided by the retailer is entirely their responsibility. No person or company is authorized to change the terms of this warranty. This warranty gives the consumer specific legal rights. He/she may also have other statutory rights which may vary from state to state and country to country. However, to the extent not prohibited by law, this limited warranty is exclusive and in lieu of all other warranties, oral, written, statutory, express or implied (including without limitation the warranties of merchantability and fitness for a particular purpose), all of which are expressly disclaimed.

Please address any Movado Warranty claim to a Movado Authorized Service Center. To find one(s) near you, go to https://repairs.mgiservice.com/movado, click on the Movado brand logo, then the "FIND A RETAILER OR WATCH REPAIR LOCATION" button on the right in the pop-up "CREATE YOUR ACCOUNT" box. To go there now, click here.

NOTE: For Warranty information on Movado smartwatches, click here.

MOVADO AUTHORIZED SERVICE CENTERS

To locate authorized service center(s) in your global geographical region, visit https://repairs.mgiservice.com/movado, click on the Movado brand logo, then click on the "FIND AN AUTHORIZED WATCH REPAIR LOCATION" in the menu bar running down the left side of the screen. To go there now, click here.

SAFETY CONCERNS

This product may be used safely as intended. If you have any concerns or experience any safety issue when using this product, please contact us via one of the following methods:
Via email: customercare-us@mgiluxury.com
Via telephone: 1-800-810-2311