MODEL #CLH9-130

Professional Retro-Style Under Cabinet Hood with Magic Lung® Blower

Chrome accents and retro-inspired styling create a distinctive vintage look. Patented Magic Lung® technology delivers powerful yet exceptionally quiet ventilation through centrifugal filtration, while SensaSource® automatically adjusts blower speed for enhanced grease control and fire safety. Dishwasher-safe components simplify cleanup.

To view available finishes & accessories please visit ventahood.com/products/CLH9-130

SPECIFICATIONS

WIDTH	30"
DEPTH	21"
HEIGHT	9"
CFM [1]	300
EQUIVALENT CFM [2]	450
SOUND RATING (HIGH SPEED) [3]	5.4 Sones / 55.4 dB
LIGHTING	2 LEDs 2700K Warm White

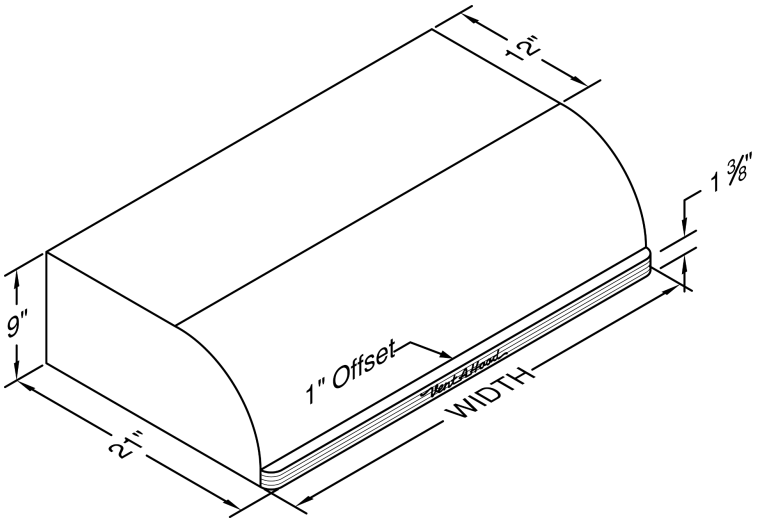

RECOMMENDED MOUNTING HEIGHT

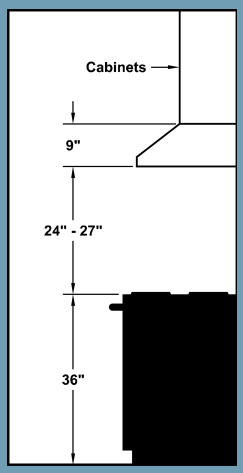

NOTE: Exceeding recommended mounting height may compromise performance.

CONNECTIONS

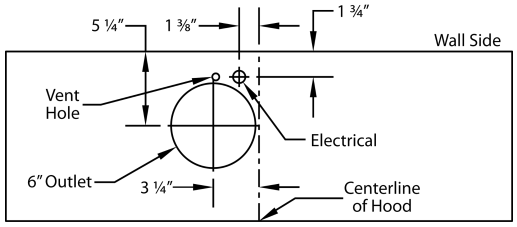

300 CFM B100 Single Blower (Top View)

ELECTRICAL/MECHANICAL SPECIFICATIONS FOR BLOWER UNIT

MODEL	VOLTS	AMPS[4]	HZ	RPM	CFM @ 0.0" SP[5]	CFM @ 0.1" SP	CFM @ 0.2" SP	CFM @ 0.3" SP	MIN. ROUND DUCT SIZE
B100 Single	**115**	**2.5**	**60**	**1550**	**300**	**273**	**245**	**225**	**6" (28sq.in.)**

[1] CFM (cubic feet per minute) measures airflow. [2] Because Magic Lung® blowers use centrifugal filtration instead of traditional baffle or mesh filters, they move air more efficiently. When comparing to other brands, use Equivalent CFM to understand real-world performance. [3] Sones measure perceived loudness—lower values indicate quieter operation. Decibel values shown are approximate equivalents. [4] Add 2.5 amps for each warming light. This model is equipped with LED lighting: (2 lights: 30" - 41", 3 lights: 42" - 48"). [5] Airflow (CFM) decreases as duct resistance (static pressure) increases. Values at 0.1"–0.3" SP reflect typical installed conditions.