MODEL #AH12-236

Professional Retro-Style Wall Mount Hood with Magic Lung® Blower

Chrome accents and retro-inspired styling create a distinctive vintage look. Patented Magic Lung® technology delivers powerful yet exceptionally quiet ventilation through centrifugal filtration, while SensaSource® automatically adjusts blower speed for enhanced grease control and fire safety. Dishwasher-safe components simplify cleanup. Matching duct covers sold separately.

To view available finishes & accessories please visit ventahood.com/products/AH12-236

SPECIFICATIONS

WIDTH	36"
DEPTH	27"
HEIGHT	12"
CFM [1]	600
EQUIVALENT CFM [2]	900
SOUND RATING (HIGH SPEED) [3]	6.5 Sones / 57 dB
LIGHTING [4]	2 LEDs 2700K Warm White

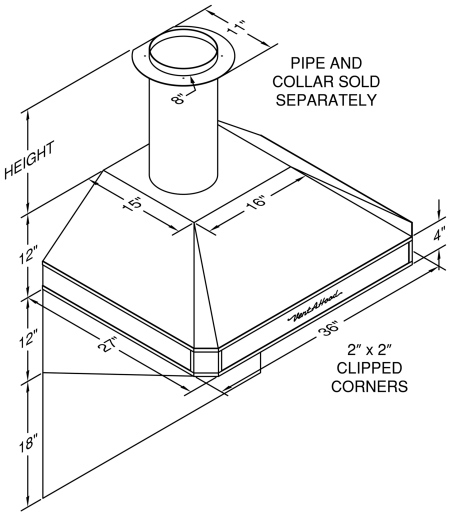

DUCT COVERS

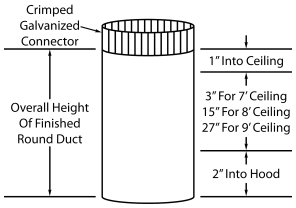

Optional Painted Round Duct
Models: ARDC-6/6, ARDC-6/18, ARDC-6/30 +3 more

RECOMMENDED MOUNTING HEIGHT

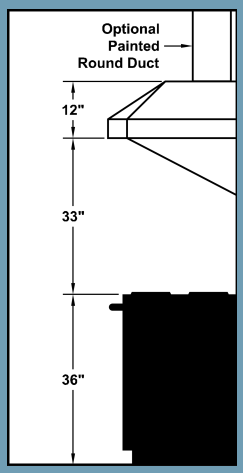

NOTE: Exceeding recommended mounting height may compromise performance.

CONNECTIONS

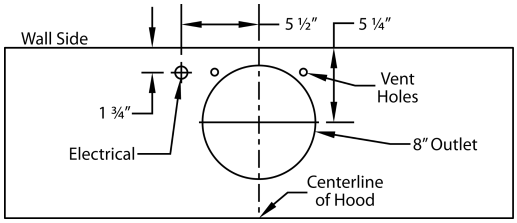

600 CFM B200 Dual Blower (Top View)

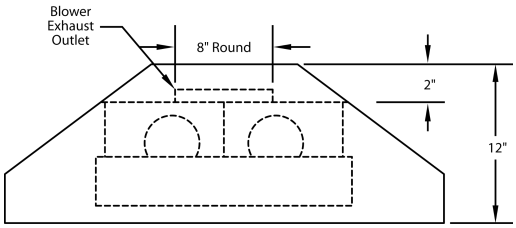

(Front View)

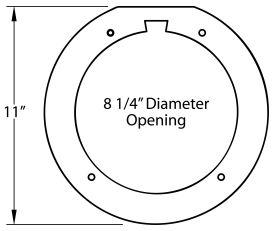

ARC8 Optional Ceiling Collar

ELECTRICAL/MECHANICAL SPECIFICATIONS FOR BLOWER UNIT

MODEL	VOLTS	AMPS	HZ	RPM	CFM @ 0.0" SP[5]	CFM @ 0.1" SP	CFM @ 0.2" SP	CFM @ 0.3" SP	MIN. ROUND DUCT SIZE
B200 Dual	**115**	**4.0**	**60**	**1550**	**600**	**531**	**480**	**430**	**8" (50sq.in.)**

[1] CFM (cubic feet per minute) measures airflow. [2] Because Magic Lung® blowers use centrifugal filtration instead of traditional baffle or mesh filters, they move air more efficiently. When comparing to other brands, use Equivalent CFM to understand real-world performance. [3] Sones measure perceived loudness—lower values indicate quieter operation. Decibel values shown are approximate equivalents. [4] This model is not available with heat lamps. [5] Airflow (CFM) decreases as duct resistance (static pressure) increases. Values at 0.1"–0.3" SP reflect typical installed conditions.

SPECIFICATIONS SUBJECT TO CHANGE WITHOUT NOTICE 071526