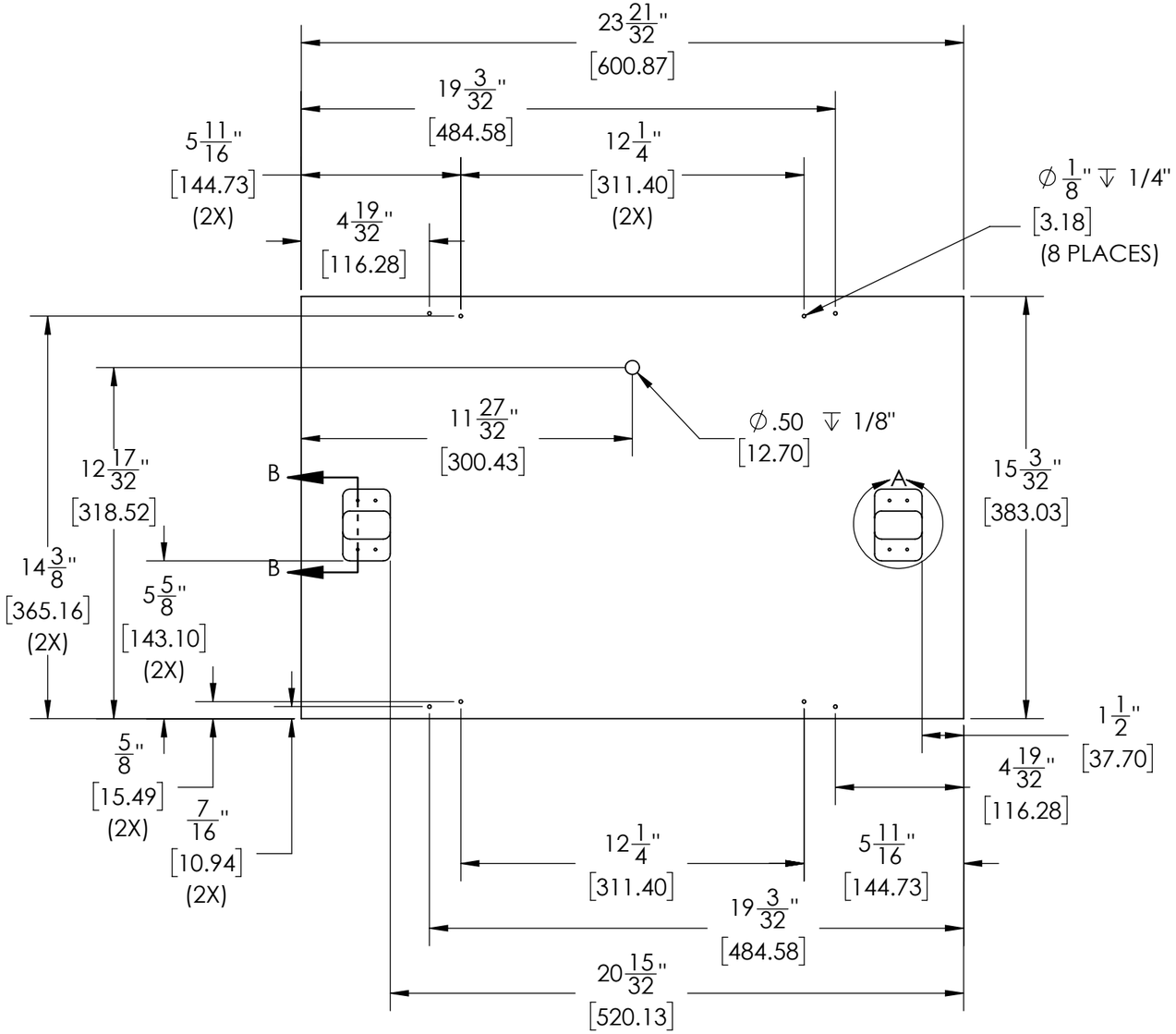

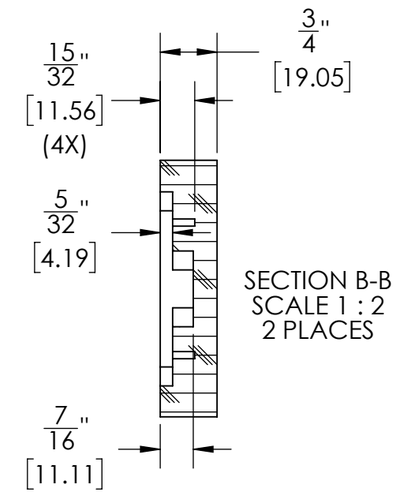

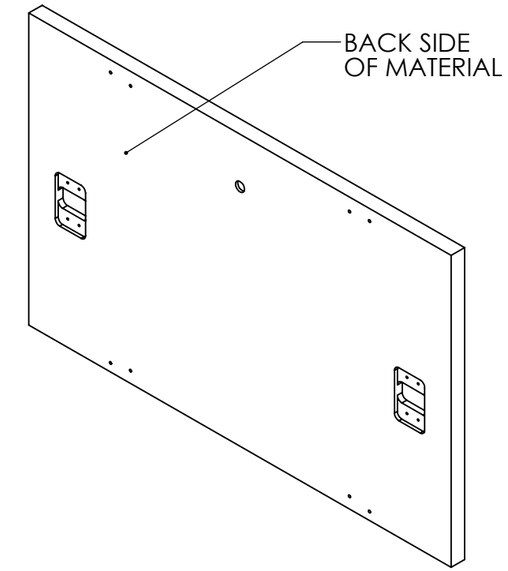

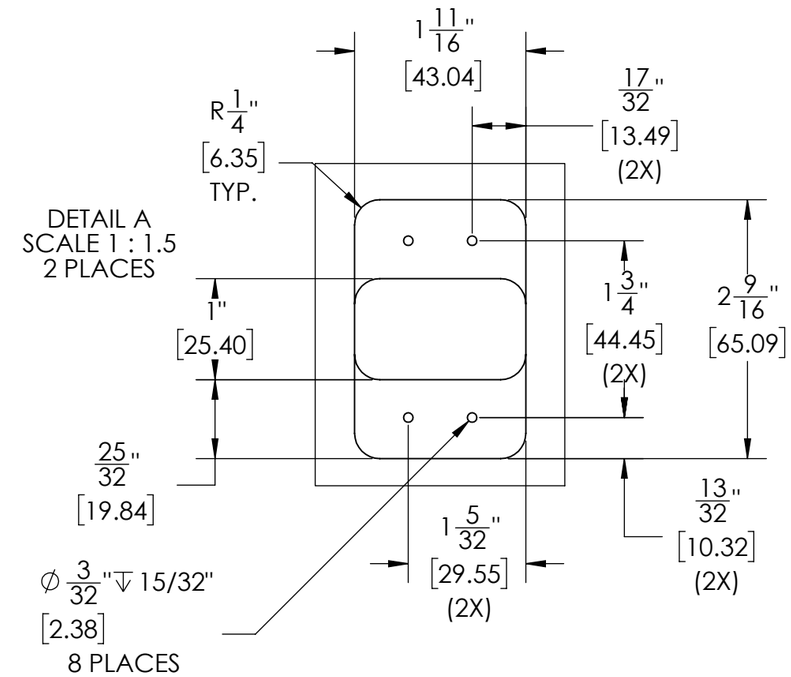

NOTE:

.50 DIAMETER HOLE IS A REFERENCE FEATURE TO INDICATE THE TOP EDGE OF THE DRAWER OVERLAY.
ALL HANDLES SHOULD BE MOUNTED TOWARDS THIS SIDE OF THE OVERLAY.

REVISIONS

REV	ECO	DESCRIPTION	DESIGNER	DATE	APPROVED BY
A	2025-6769	NEW RELEASE	kyle.shimel	10/10/2025	kyle.shimel
B	2026-7052	ADDED LOCKING PAGES	kyle.shimel	06/09/2026	kyle.shimel

PART NUMBER
1055258

DRAWING NUMBER
1055258

DESCRIPTION
OVERLAY, TEMPLATE, PANEL READY, DRAWER, STD HT, UC, GEN5

GAUGE: ga | WEIGHT: 5.365 LBS | OVERALL DIMENSIONS: L X W X H | REQ QUAL MFG: NO

MATERIAL: WOOD OR SOLID SURFACES

REFERENCE:

SCALE: 1:8

SHEET 1 OF 4

Perlick Corporation **Milwaukee, Wisconsin**

UNLESS OTHERWISE SPECIFIED:
DIMENSIONS ARE IN INCHES TOLERANCES:
.X = ±0.1 Ang = ±0.5
.XX = ±0.03 Frac = ±1/64
.XXX = ±0.015
BREAK SHARP EDGES - .015 X 45°
RADIUS SHARP FILLETS - .015 TO .031

HOLES: Ø.0135 THRU Ø.125: ±.004
Ø.1260 THRU Ø.250: ±.005
Ø.2510 THRU Ø.500: ±.006
Ø.5010 THRU Ø.750: ±.008
Ø.7510 THRU Ø1.000: ±.010
Ø1.001 & UP: ±.012

THIS DOCUMENT / PUBLICATION / SOFTWARE / DRAWING CONTAINS PROPRIETARY INFORMATION WHICH IS THE PROPERTY OF THE PERLICK CORPORATION. IT MAY NOT BE REPRODUCED OR TRANSMITTED IN ANY FORM, ELECTRONIC OR MECHANICAL, INCLUDING PHOTOCOPYING, RECORDING, OR USED IN ANY INFORMATION STORAGE, TRANSMISSION, OR RETRIEVAL SYSTEM, WITHOUT WRITTEN PERMISSION FROM THE PERLICK CORPORATION. COPYRIGHT 2015 PERLICK CORPORATION. ALL RIGHTS RESERVED.

LOCKING FEATURES

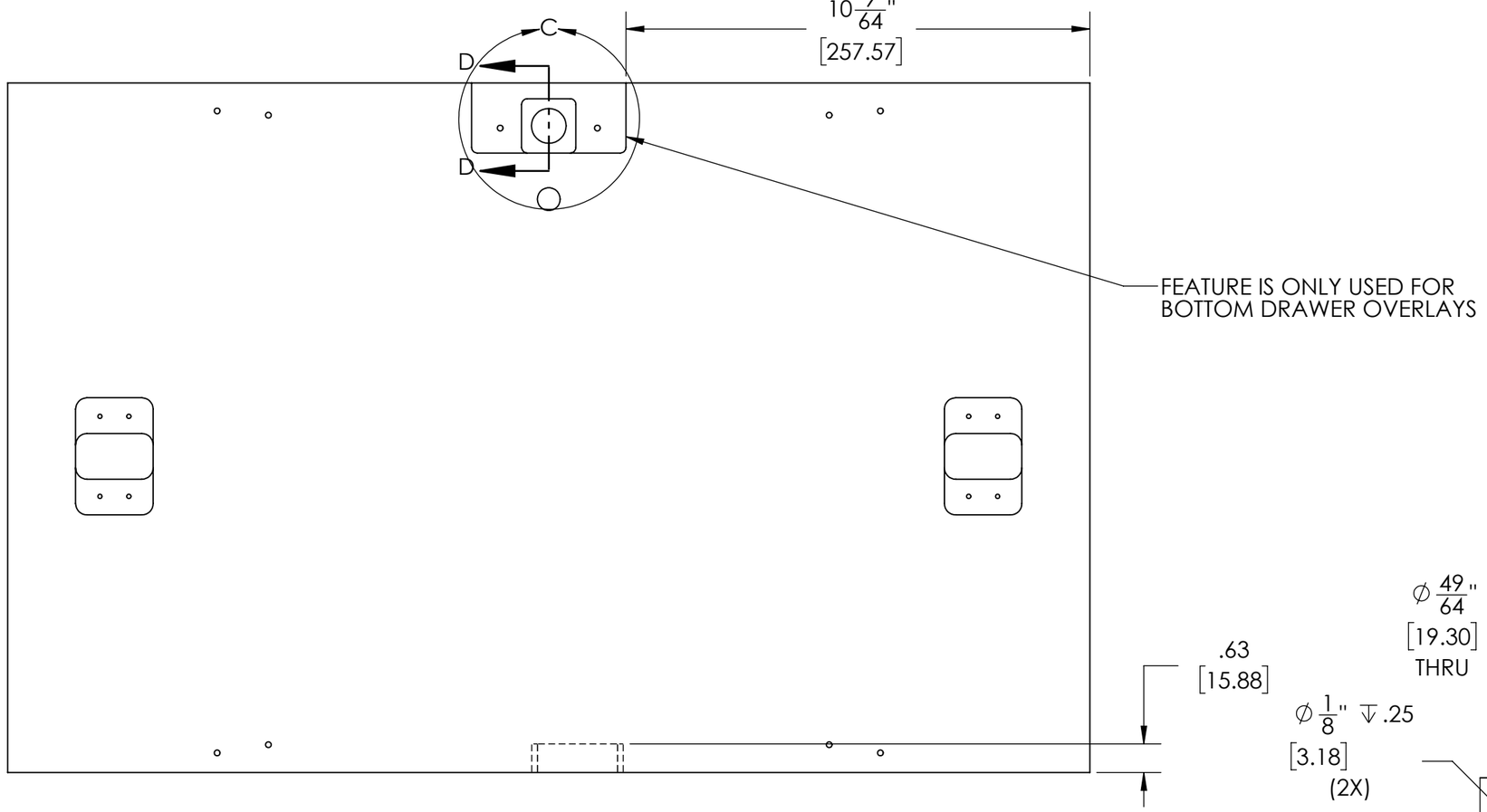

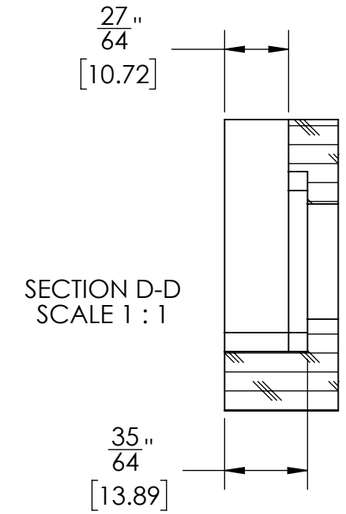

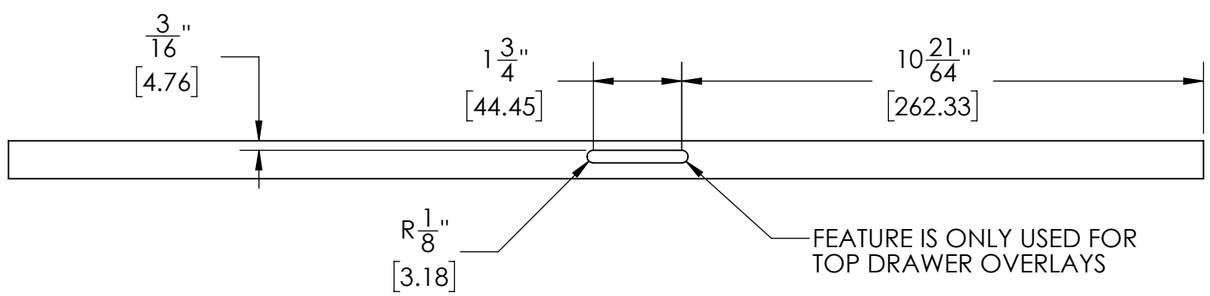

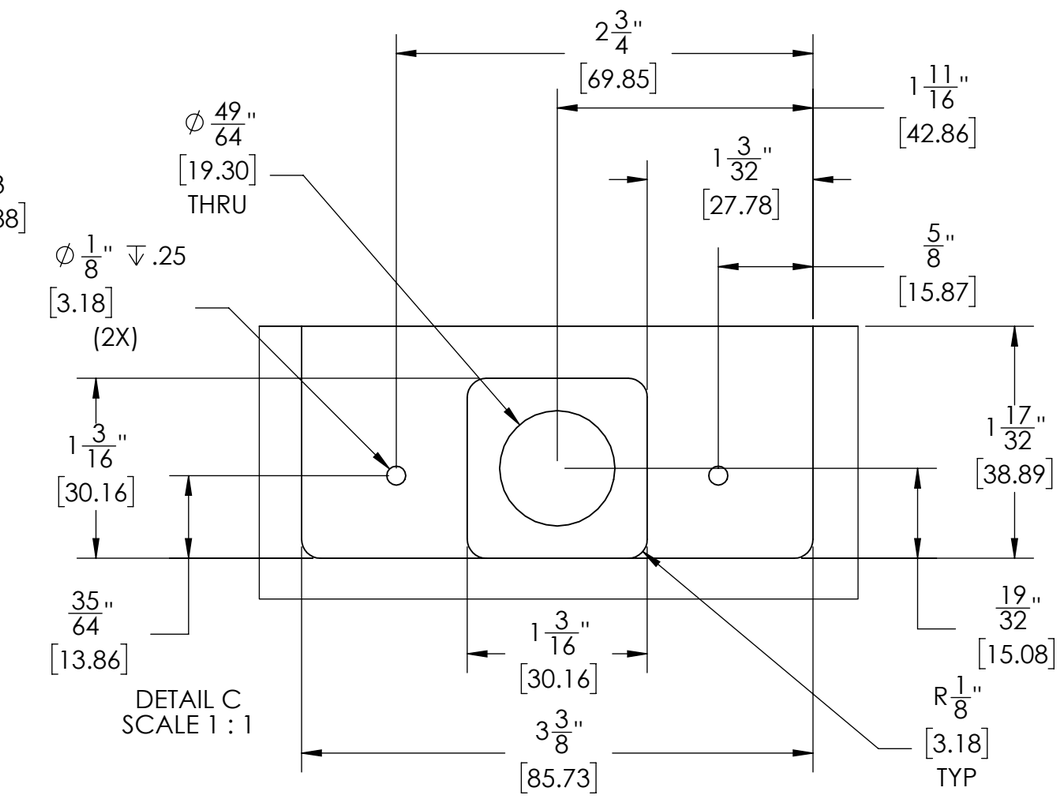

DETAIL C
SCALE 1 : 1

PART NUMBER	DRAWING NUMBER
1055258	1055258

DESCRIPTION
OVERLAY, TEMPLATE, PANEL READY, DRAWER, STD HT, UC, GEN5

GAUGE: ga	WEIGHT: 5.365 LBS	OVERALL DIMENSIONS: L X W X H	REQ QUAL MFG: NO

MATERIAL: WOOD OR SOLID SURFACES

REFERENCE:

SCALE: 1:4

SHEET 2 OF 4

UNLESS OTHERWISE SPECIFIED:
DIMENSIONS ARE IN INCHES TOLERANCES:
.X = ±0.1 Ang = ±0.5
.XX = ±0.03 Frac = ±1/64
.XXX = ±0.015
BREAK SHARP EDGES - .015 X 45°
RADIUS SHARP FILLETS - .015 TO .031

HOLES: Ø.0135 THRU Ø.125: ±.004
Ø.1260 THRU Ø.250: ±.005
Ø.2510 THRU Ø.500: ±.006
Ø.5010 THRU Ø.750: ±.008
Ø.7510 THRU Ø1.000: ±.010
Ø1.001 & UP: ±.012

Perlick Corporation **Milwaukee, Wisconsin**

THIS DOCUMENT / PUBLICATION / SOFTWARE / DRAWING CONTAINS PROPRIETARY INFORMATION WHICH IS THE PROPERTY OF THE PERLICK CORPORATION. IT MAY NOT BE REPRODUCED OR TRANSMITTED IN ANY FORM, ELECTRONIC OR MECHANICAL, INCLUDING PHOTOCOPYING, RECORDING, OR USED IN ANY INFORMATION STORAGE, TRANSMISSION, OR RETRIEVAL SYSTEM, WITHOUT WRITTEN PERMISSION FROM THE PERLICK CORPORATION. COPYRIGHT 2015 PERLICK CORPORATION. ALL RIGHTS RESERVED.

MOUNTING HOLE LOCATIONS FOR OTHER METAL BASED OVERLAYS

NOTE:

1. HOLE LOCATIONS ARE MEANT FOR A M5X.8, 4MM LOW-PROFILE SHOULDER BOLT WHICH ACTS AS AN EXTRA INSTALLATION AID. CUSTOMER/FABRICATOR/INSTALLER MAY DETERMINE HOLE SIZE AND MOUNTING OPTIONS DEPENDING ON THE MATERIAL BEING USED.

SHOULDER BOLT
PERLICK P/N: 1053729

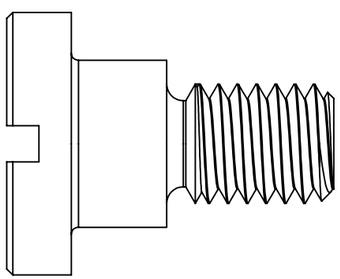

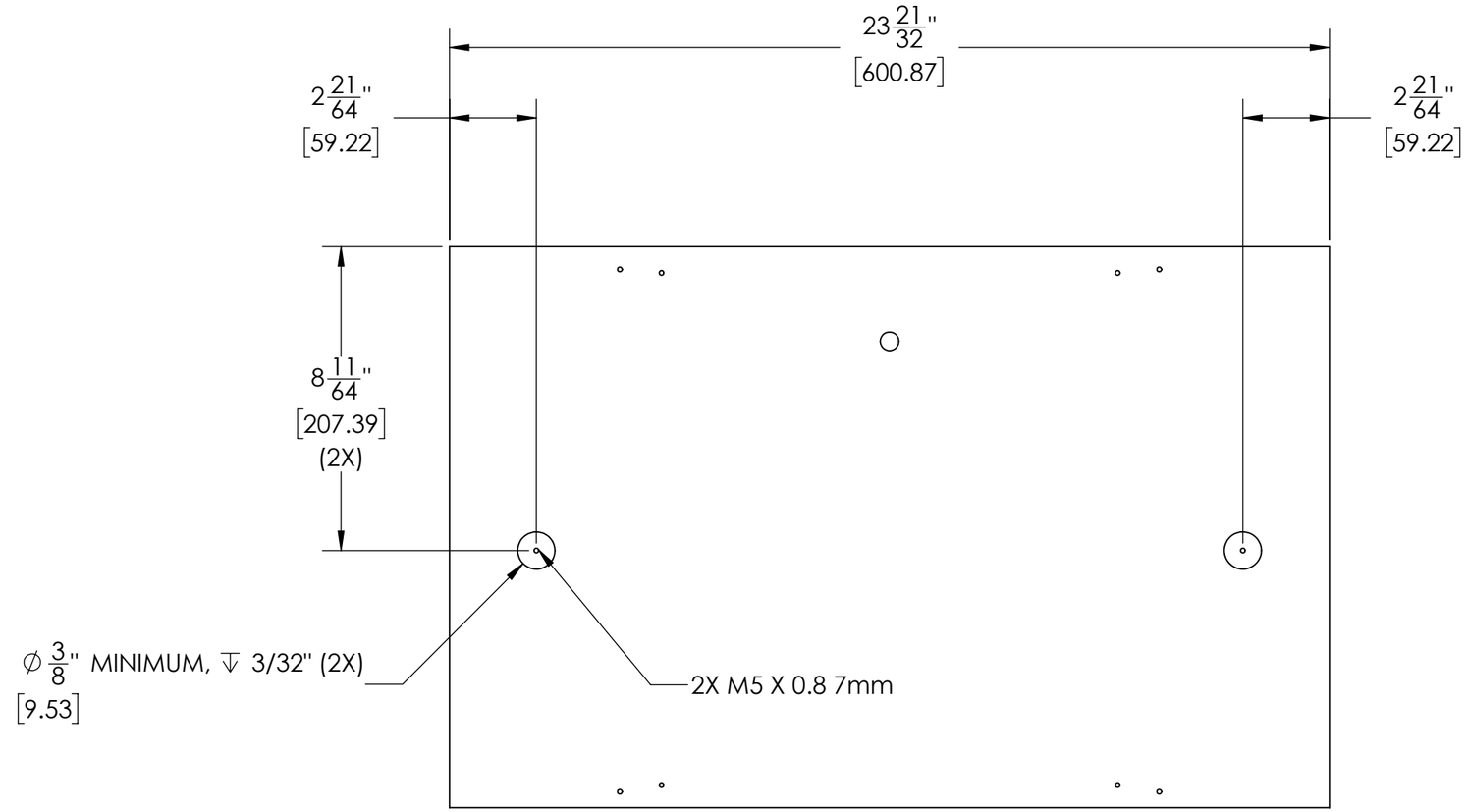

PART NUMBER	DRAWING NUMBER
1055258	1055258

DESCRIPTION
OVERLAY, TEMPLATE, PANEL READY, DRAWER, STD HT, UC, GEN5

GAUGE: ga	WEIGHT: 5.365 LBS	OVERALL DIMENSIONS: L X W X H	REQ QUAL MFG: NO

MATERIAL: WOOD OR SOLID SURFACES

REFERENCE:

SCALE: 4:1

Perlick Corporation **Milwaukee, Wisconsin**

SHEET 3 OF 4

UNLESS OTHERWISE SPECIFIED:
DIMENSIONS ARE IN INCHES TOLERANCES:
.X = ±0.1 Ang = ±0.5
.XX = ±0.03 Frac = ±1/64
.XXX = ±0.015
BREAK SHARP EDGES - .015 X 45°
RADIUS SHARP FILLETS - .015 TO .031

HOLES: Ø.0135 THRU Ø.125: ±.004
Ø.1260 THRU Ø.250: ±.005
Ø.2510 THRU Ø.500: ±.006
Ø.5010 THRU Ø.750: ±.008
Ø.7510 THRU Ø1.000: ±.010
Ø1.001 & UP: ±.012

THIS DOCUMENT / PUBLICATION / SOFTWARE / DRAWING CONTAINS PROPRIETARY INFORMATION WHICH IS THE PROPERTY OF THE PERLICK CORPORATION. IT MAY NOT BE REPRODUCED OR TRANSMITTED IN ANY FORM, ELECTRONIC OR MECHANICAL, INCLUDING PHOTOCOPYING, RECORDING, OR USED IN ANY INFORMATION STORAGE, TRANSMISSION, OR RETRIEVAL SYSTEM, WITHOUT WRITTEN PERMISSION FROM THE PERLICK CORPORATION. COPYRIGHT 2015 PERLICK CORPORATION. ALL RIGHTS RESERVED.
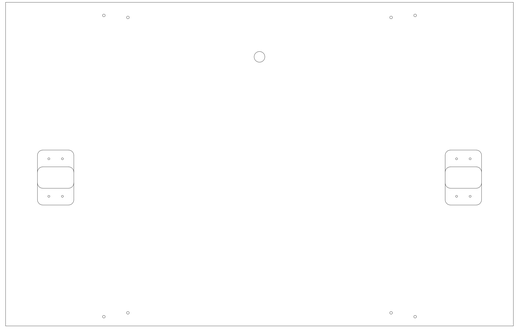
1055258
REV 'B'
1:1