FULL MOTION DUAL STUD MOUNT

LDX690

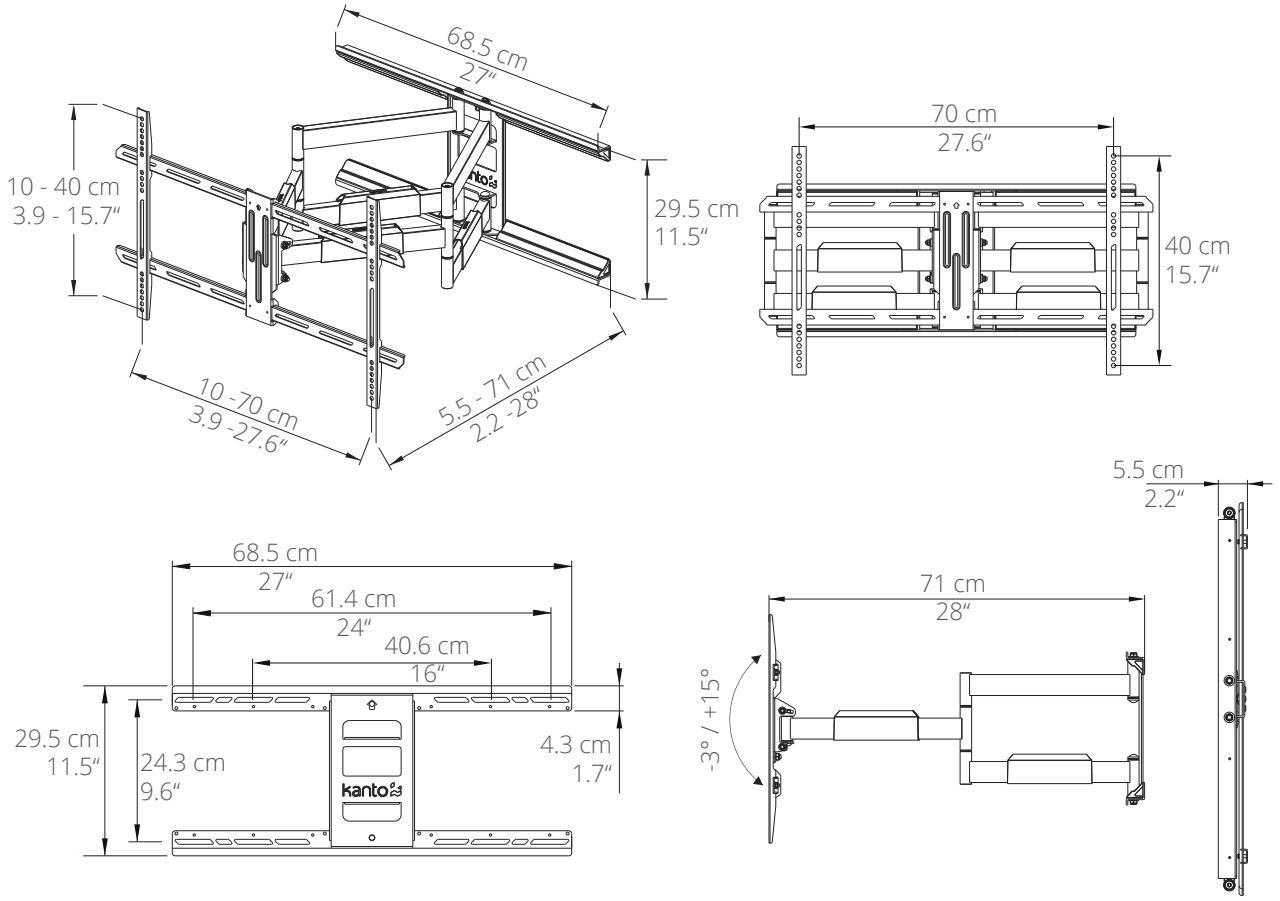

kanto
kantomounts.com