LEICA **Q3 MONOCHROM**

Technical Data.

Designation	**Leica Q3 Monochrom**
Camera type	Digital 35 mm compact camera
Type No.	6506
Order No.	19 200 EU/US/CN, 19 201 JP, 19 202 ROW
Buffer memory	8 GB Capacity, depending on frame rate and picture format, estimated quantity (number of possible images in the buffer memory)

	DNG	DNG + JPG	JPG
15 fps	63	63	67
9 fps	70	66	76
7 fps	74	69	83
5 fps	79	70	90
4 fps	83	72	104
2 fps	164	88	947

Storage medium	UHS-II (recommended), UHS-I, SD/SDHC/SDXC memory card
Material	Full metal housing: magnesium die-cast, leather covering, protection type IP52
Operating conditions	0°C to +40°C
Interfaces	ISO accessory shoe with additional control contacts for Leica flash units, HDMI jack Type D, USB 3.1 Gen 2 Type C up to 10 Gbps
Tripod thread	A 1/4 DIN 4503 (1/4") with stainless steel in the base

Dimensions

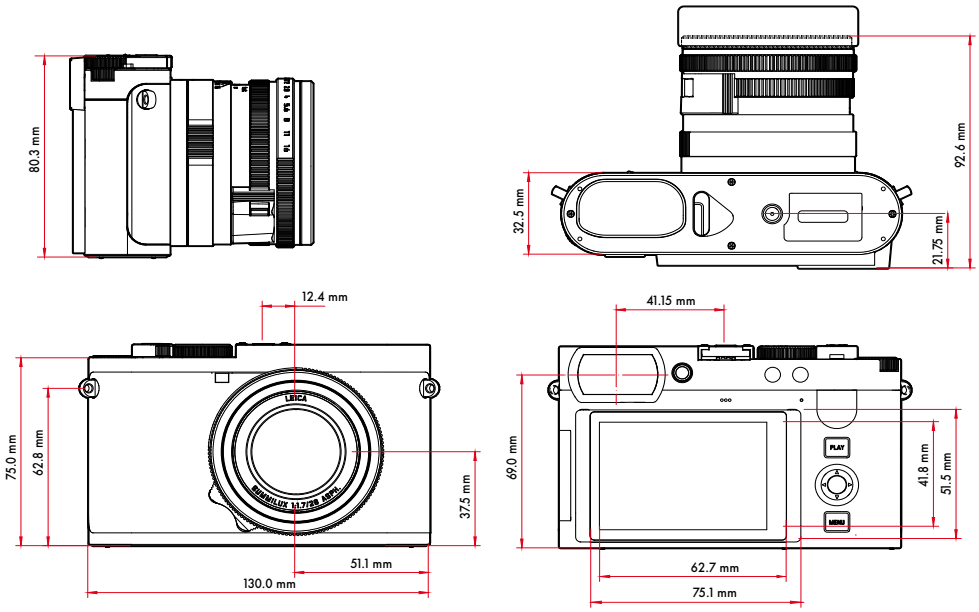

Weight	Approx. 746 g/662 g (with/without battery)

Leica Camera AG I Am Leitz-Park 5 I 35578 WETZLAR I GERMANY I Phone +49(0)6441-2080-0 I Fax +49(0)6441-2080-333 I www.leica-camera.com

LEICA **Q3 MONOCHROM**

Sensor

Sensor size	CMOS sensor, 62.39 MP/60.3 MP (total/effective)
Processor	Leica Maestro series (Maestro IV)
Filter	no low-pass filter
File formats	Photo: DNG™ (raw data), DNG + JPG, JPG (DCF 2.0, Exif 3.0) Video:

MP4	h.265	AAC	48 kHz/16 bit
	h.264	AAC	48 kHz/16 bit
MOV	h.265	LPCM	48 kHz/24 bit
	h.264	LPCM	48 kHz/24 bit
	ProRes	LPCM	48 kHz/24 bit

Image resolution

DNG™	9520 x 6336 pixels (60.3 MP) 7404 x 4928 pixels (36.5 MP) 5288 x 3518 pixels (18.6 MP)
JPG	9520 x 6336 pixels (60.3 MP) 7392 x 4928 pixels (36.4 MP) 5280 x 3512 pixels (18.5 MP)

File size	DNG™: approx. 70 MB, depending on resolution and image content JPG: depending on resolution and image content Video: max. length: 29 min
Bit depth	DNG™: 14 bit/12 bit JPG: 8 bit

Video Resolution

	Resolution	Aspect ratio
C8K	8192 x 4320	17:9
8K	7680 x 4320	16:9
C4K	4096 x 2160	17:9
4K	3840 x 2160	16:9
Full HD	1920 x 1080	16:9

Video frame rate/bit rate

File Format	Resolution	Frame rate	Bit rate	YUV / Bit	Compression	Codec
MP4	8K 7680 x 4320	29.97 fps	300 Mbps	4:2:0 / 10 bit	Long GOP	HEVC
		25.00 fps				
		23.98 fps				
	4K 3840 x 2160	59.94 fps	100 Mpbs			
		50.00 fps				
		29.97 fps		4:2:0 / 8 bit		H264
		25.00 fps				
		23.98 fps				
	FHD 1920 x 1080	59.94 fps	28 Mpbs			
		50.00 fps				
		29.97 fps	20 Mpbs			
		25.00 fps				
		23.98 fps	24 Mpbs			

Leica Camera AG I Am Leitz-Park 5 I 35578 WETZLAR I GERMANY I Phone +49(0)6441-2080-0 I Fax +49(0)6441-2080-333 I www.leica-camera.com

MOV	C8K 8192 x 4320	29.97 fps	300 Mbps	4:2:0 / 10 bit	Long GOP	HEVC
		25.00 fps				
		24.00 fps				
		23.98 fps				
	8K 7680 x 4320	29.97 fps				
		25.00 fps				
		24.00 fps				
		23.98 fps				
	C4K 4096 x 2160	59.94 fps	600 Mbps	4:2:2 / 10 bit	ALL-I	H264
		50.00 fps				
		48.00 fps				
		47.95 fps				
		29.97 fps	400 Mbps			
		25.00 fps				
		24.00 fps				
		23.98 fps				
	4K 3840 x 2160	59.94 fps	600 Mbps			
		50.00 fps				
		48.00 fps				
		47.95 fps				
		29.97 fps	400 Mbps			
		25.00 fps				
		24.00 fps				
		23.98 fps				
	FHD 1920 x 1080	119.88 fps				
		100.00 fps				
		59.94 fps	200 Mbps			
		50.00 fps				
		48.00 fps				
		47.95 fps				
		29.97 fps				
		25.00 fps				
		24.00 fps				
		23.98 fps				
	FHD Slow Motion 1920 x 1080	Sensor: 119.88 fps Recording: 29.97 fps	100 Mbps	4:2:0 / 10 bit	Long GOP	HEVC
		Sensor: 100.00 fps Recording: 25.00 fps				

MOV	FHD 1920 x 1080	59.94 fps	454 Mbps	422HQ	-	ProRes
		50.00 fps	378 Mbps			
		29.97 fps	227 Mbps			
		25.00 fps	189 Mbps			
		24.00 fps	182 Mbps			
		23.98 fps	181 Mbps			

Lens

Designation	Leica Summilux 28 f/1.7 ASPH., 11 lenses in 9 segments, 3 aspherical lenses
Lens filter thread	E49
Digital zoom	Optionally approx. 1.25x (equivalent to 35 mm), approx. 1.7x (equivalent to 50 mm), approx. 2.7x (equivalent to 75 mm), or approx. 3.2x (equivalent to 90 mm)
Image stabilization	Visual compensation system for photos and video recordings
Aperture range	F1.7 to F16 in 1/3 EV increments

Leica Camera AG I Am Leitz-Park 5 I 35578 WETZLAR I GERMANY I Phone +49(0)6441-2080-0 I Fax +49(0)6441-2080-333 I www.leica-camera.com

LEICA Q3 MONOCHROM

MTF Diagrams

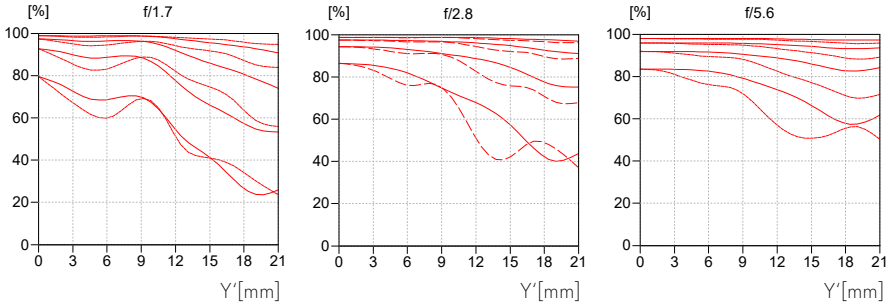

The MTF is shown in each case for the max. aperture of 2.0, as we as for 2.8 and 5.6 for long focus distances (infinity). The contrast is plotted in percentages for 5, 10, 20, 40 Lp/mm over the height of the format for tangential (dashed line) and sagittal structures (continuous line) for white light. The plots for 5 and 10 Lp/mm offer an impression of the contrast behavior for coarser object structures, while the 20 and 40 Lp/mm plots document the resolution capability for fine and finest object structures.

Lens cut

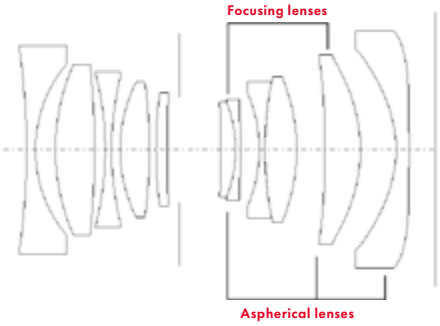

Shutter

Shutter type	Mechanical central shutter or optional electronic shutter
Shutter speeds	Mech. shutter: 60 min to 1/2000 s Electro. shutter function: 60 s to 1/16000 s Flash Synchronization: up to 1/2000 s
Shutter button	Two-stage (1st stage: Activation of the camera electronics including autofocus and exposure metering, 2nd stage: Taking the picture)
Self-timer	Delay time: 2 s or 12 s
Drive Mode	Single, Continuous Shooting, Interval Shooting, Exposure Bracketing, Multi-Shot Continuous shooting:

Setting	Shutter type	Autofocus mode for continuous shooting
2 fps, 14 bit, AF	Mech. or electr. shutter	Automatic settings (exposure settings in operating modes P/A/S, automatic white balance and autofocus) are implemented individually for each frame.
4 fps, 14 bit, AF		
5 fps, 12 bit, AF		
7 fps, 14 bit, AF	Electr. shutter	Automatic settings (exposure settings in operating modes P/A/S, automatic white balance and autofocus) are implemented for the first frame, and are then applied for each subsequent frame in the same picture series.
9 fps, 12 bit, AF		
15 fps, 12 bit, AF		

Focusing

Focus range	30 cm to ∞ With macro setting: from 17 cm
Focus mode	Automatic or manual With manual setting: optional magnifying glass function (Auto Magnification) and edge marking (Focus Peaking) available as focus assist
Autofocus system	Contrast detection
Autofocus modes	Intelligent AF (automatically refocuses as soon as something changes in the scene), AFs, AFc, AF setting can be saved, optional Touch AF
Autofocus metering methods	Spot (can be shifted), Field (can be shifted and scaled), Multi-field, Zone (can be shifted and scaled), Eye/Face/Body Detection, Animal Detection (Beta), Tracking
Autofocus metering fields	315

Leica Camera AG I Am Leitz-Park 5 I 35578 WETZLAR I GERMANY I Phone +49(0)6441-2080-0 I Fax +49(0)6441-2080-333 I www.leica-camera.com

LEICA Q3 MONOCHROM

Exposure	
Exposure metering	TTL (exposure metering through the lens), with working aperture
Metering principle	Exposure metering is done by the image sensor for all exposure metering methods (in Live View mode and in rangefinder mode)
Exposure metering methods	Spot, Center-Weighted, Highlight-Weighted, Multi-Field
Exposure modes	Program AE mode (P) Aperture-priority mode (A): manual aperture setting Shutter-priority mode (S): manual shutter-speed setting Manual (M): manual setting for shutter speed and aperture Various fully automatic variants (Scene Mode): AUTO, Digiscoping
Exposure compensation	±3 EV in 1/3 EV increments
Automatic bracketing	3 or 5 frames, graduations between shoots up to 3 EV, in 1/3 EV increments additional optional exposure compensation: up to ±3 EV

ISO sensitivity range

	Photo	Video	L-Log	HLG
Auto ISO	ISO 200–ISO 200.000	ISO 200–ISO 200.000	ISO 800–ISO 200 000	
Manual	ISO 100–ISO 200 000	ISO 100–ISO 200 000		

Dual Basis ISO settings

	Photo	Video	L-Log	HLG
Low Basis-ISO	ISO 100–ISO 560	ISO 100–ISO 560	ISO 800–ISO 2200	
High Basis-ISO	ISO 640–ISO 200.000	ISO 640–ISO 200.000	ISO 2500–ISO 200 000	

Flash	
Flash unit connector	Via the accessory shoe
Flash sync time	↯ : 1/2000 s, slower shutter speeds available. High-speed shutter times between 1/2500 s and 1/16000 s are available only via the electronic shutter. Shorter shutter speeds, however, are only available via the mechanical shutter.
Flash exposure metering	Using center-weighted TTL pre-flash metering with Leica flash units (SF 26, SF 40, SF 58, SF 60, SF 64) or with system-compatible flash units, remote controlled flash SF C1
Flash exposure compensation	SF 40: ±2 EV in 1/2 EV increments SF 60: ±2 EV in 1/3 EV increments
Equipment	
Microphone	Stereo
USB Audio	Compatible RØDE USB audio devices include: VideoMic GO II, VideoMic NTG, Wireless GO II, Wireless ME, and other supported USB microphones.
Speaker	Mono
WLAN	WLAN function for connecting to the Leica FOTOS app. The Leica app is available from the Apple App Store™ or the Google Play Store™

	2.4 GHz	5 GHz	
EU/ US/ CN	IEEE802.11b/g/n: channel 1–11 (2412–2462 MHz)	Client mode: (For indoor use only) IEEE802.11a/n/ac: Channel 36–64 (5180–5320 MHz)	Access point + client mode: IEEE802.11a/n/ac: Channel 149–165 (5745–5825 MHz)
JP		Access point + client mode: (For indoor use only) IEEE802.11a/n/ac: Channel 36–48 (5180–5240 MHz)	Client mode: (For indoor use only) IEEE802.11a/n/ac: Channel 52–144 (5260–5720 MHz)
ROW		-	

Maximum output (e.i.r.p.): <14 dBm, encryption method: WLAN-compatible WPA™/WPA2™/WPA3™

Bluetooth	Bluetooth 5.0 LE: Channel 0–39 (2402–2480 MHz), maximum output (e.i.r.p.): 10 dBm
GPS	Not available everywhere due to country-specific legislation; can be added via the Leica FOTOS app. Data is written to Exif header of the picture files.
Menu languages	English, German, French, Italian, Spanish, Portuguese, Russian, Japanese, Traditional Chinese, Simplified Chinese, Korean

Leica Camera AG I Am Leitz-Park 5 I 35578 WETZLAR I GERMANY I Phone +49(0)6441-2080-0 I Fax +49(0)6441-2080-333 I www.leica-camera.com

LEICA **Q3 MONOCHROM**

Power supply	
Rechargeable battery (Leica BP-SCL6)	Lithium-ion rechargeable battery, rated voltage: 7.2 V (DC); capacity: 2200 mAh (min.), 302 shots (based on CIPA standard), 1535 shots (based on CIPA standard with adapted shooting cycle*) Manufacturer: Panasonic Energy (Wuxi) Co. Ltd., Made in China ***Cycle 1:** Switch on, 1st shutter release after 5 s, one shot every 3 s, the camera switches off after 10 shots (Auto Power Off) and switched back on after a waiting time of 5 min. ***Cycle 2:** Switch on, 1st shutter release after 5 s, one shot every 3 s, the camera switches off after 50 shots (Auto Power Off) and switched back on after a waiting time of 5 min. These cycles are repeated alternately until the battery is empty.
USB-C power adapter (Leica ACA-SCL6) (optional)	Input: AC 100–240 V, 50/60 Hz, 0.25 A, automatic switchover; Output: DC 5 V/9 V, 3 A; Manufacturer: Salom Electric (Xiamen) Co., Ltd., Made in China
Charger (Leica BC-SCL4) (optional accessory)	Input: AC 100–240 V, 50/60 Hz, 0.25 A, automatic switchover; output: DC 8.4 V 0.85 A; manufacturer: Salom Electric (Xiamen) Co., Ltd., Made in China
USB-C DC Coupler (Leica DC-SCL6)	Input: DC 9 V/3 A (min.), Output: DC 9 V (with ACA-SCL6), supports USB PD 3.1, Manufacturer: Salom Electric (Xiamen) Co., Ltd., Made in China.
Charging via USB	During operation: 9 V/3 A (min. 27 W) With camera switched off: 5 V/1500 mA (2.5 W or greater)
Wireless Charging	Optimal performance with 9 V chargers (10 W Charging Pad required)
Rated values for input voltage/ power	7.2 V ⎓ 2.3 A (battery), 5 V ⎓ 3.0 A / 9 V ⎓ 2.5 A (USB)

QuickTime

Leica Camera AG I Am Leitz-Park 5 I 35578 WETZLAR I GERMANY I Phone +49(0)6441-2080-0 I Fax +49(0)6441-2080-333 I www.leica-camera.com