Body-Solid®

Built for Life

VDRA30

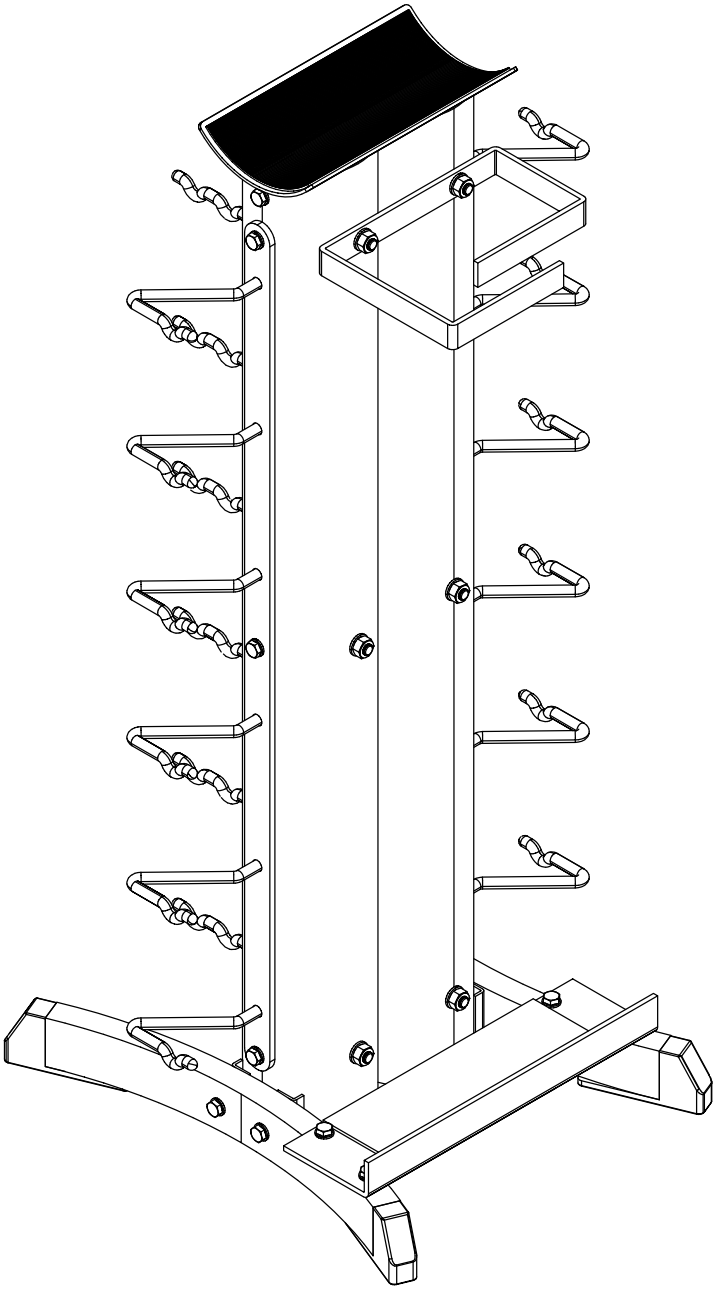

Assembly & Instructions

OWNER'S MANUAL

v. 030609

Important Safety Instructions

Before beginning any fitness program, you should obtain a complete physical examination from your physician.

Il est conseille de subir un examen medical complet avant d'entreprendre tout programme d'exercise. Si vous avez des etourdissements ou des faiblesses, arretez les exercices immediatement.

Antes de comenzar cualquier programma de ejercicios, deberias tener un examen fisico con su doctor.

When using exercise equipment, you should always take basic precautions, including the following:

- Read all instructions before using the VDRA30. These instructions are written to ensure your safety and to protect the unit.
- Do not allow children on or near the equipment.
- Use the equipment only for its intended purpose as described in this guide. Do not use accessory attachments that are not recommended by the manufacturer. Such attachments might cause injuries.
- Wear proper exercise clothing and shoes for your workout, no loose clothing.
- Use care when getting on or off the unit.
- Do not overexert yourself or work to exhaustion.
- If you feel any pain or abnormal symptoms, stop your workout immediately and consult your physician.
- Never operate unit when it has been dropped or damaged. Return the equipment to a service center for examination and repair.
- Never drop or insert objects into any opening in the equipment.
- Always check the unit before each use. Make sure that all fasteners are secure and in good working condition.
- Do not use the equipment outdoors or near water.

Personal Safety During Assembly

- It is strongly recommended that a qualified dealer assemble the equipment. ***Assistance is required.***
- Before beginning assembly, please take the time to read the instructions thoroughly.
- Read each step in the assembly instructions and follow the steps in sequence. Do not skip ahead. If you skip ahead, you may learn later that you have to disassemble components and that you may have damaged the equipment.
- Assemble and operate the VDRA30 on a solid, level surface. Locate the unit a few feet from the walls or furniture to provide easy access.

The VDRA30 is designed for your enjoyment. By following these precautions and using common sense, you will have many safe and pleasurable hours of healthful exercise with your Body-Solid VDRA30.

After assembly, you should check all functions to ensure correct operation. If you experience problems, first recheck the assembly instructions to locate any possible errors made during assembly. If you are unable to correct the problem, call the dealer from whom you purchased the machine or call 1-800-556-3113 for the dealer nearest you.

Obtaining Service

Please use this Owner's Manual to make sure that all parts have been included in your shipment. When ordering parts, you must use the part number and description from this Owner's Manual. Use only Body-Solid replacement parts when servicing this unit. Failure to do so will void your warranty and could result in personal injury.

For information about product operation or service, check out the official Body-Solid website at www.bodysolid.com or contact an authorized Body-Solid dealer or a Body-Solid factory-authorized service company or contact Body-Solid customer service at one of the following:

Toll Free: 1-800-556-3113
Phone: 1-708-427-3555
Fax: 1-708-427-3556
Hours: M-F 8:30-5:00 CST
E-Mail: service@bodysolid.com

Or write to: Body-Solid, Inc.
Service Department
1900 S. Des Plaines Ave.
Forest Park, IL 60130 USA

Retain this Owner's Manual for future reference. Part numbers are required when ordering replacement parts.

Before You Begin

Thank you for purchasing the VDRA30. This gym is part of the Body-Solid line of quality strength training machines, which let you target specific muscle groups to achieve better muscle tone and overall body conditioning. To maximize your use of the equipment please study this Owner's Manual thoroughly.

Unpacking the Equipment

The VDRA30 is carefully tested and inspected before shipment. We have shipped the unit in several pieces that require assembly. Ask for assistance during the assembly process. Carefully unpack the boxes and lay the pieces on the floor near the area where you plan to use the equipment.

Be careful to assemble all components in the sequence presented in this guide.

If any items are missing, contact the dealer from whom you purchased the unit or call 1-800-556-3113 for the dealer nearest you.

Body-Solid continually seeks ways to improve the performance, specifications and product manuals in order to ensure that only superior products are released from our factories. Please take the time to carefully read through this manual thoroughly. Instructions contained in this document are not intended to cover all details or variations possible with Body-Solid equipment, or to cover every contingency that may be met in conjunction with installation, operation, maintenance or troubleshooting of the equipment. Even though we have prepared this manual with extreme care, neither the publisher nor the author can accept responsibility for any errors in, or omission from, the information given. Should additional information be required, or should situations arise that are not covered by this manual, the matter should be directed to your local Body-Solid representative, or the Service Department at Body-Solid Inc. in Forest Park, Illinois.

Any Questions?
Call (800) 556-3113

Preparations

CAUTION: To set up this unit, you will need assistance. Do not attempt assembly by yourself.

You must review and follow the instructions in this Owner's Manual. If you do not assemble and use the VDRA30 according to these guidelines, you could void the Body-Solid warranty.

Required Tools

The basic tools that you must obtain before assembling the VDRA30 include but are not limited to:

- Standard Wrench Set
- Metric Wrench Set
- Adjustable Wrench

Installation Requirements

Follow these installation requirements when assembling the VDRA30:

Set up the VDRA30 on a solid, flat surface. A smooth, flat surface under the machine helps keep it level. A level machine has fewer malfunctions.

Provide ample space around the machine. Open space around the machine allows for easier access.

Insert all bolts in the same direction. For aesthetic purposes, insert all bolts in the same direction unless specified (in text or illustrations) to do otherwise.

Leave room for adjustments. Tighten fasteners such as bolts, nuts, and screws so the unit is stable, but leave room for adjustments. Do not fully tighten fasteners until instructed in the assembly steps to do so.

Fill out and mail the warranty card.

CAUTION: Obtain assistance! Do not attempt to assemble the VDRA30 by yourself. Review the Installation Requirements before proceeding with the following steps.

Be careful to assemble components in the sequence presented in this guide.

NOTE: With so many assembled parts, proper alignment and adjustment is critical. While tightening the nuts and bolts, be sure to leave room for adjustments.

Assembly of the VDRA30 takes professional installers about 1 hour to complete. If this is the first time you have assembled this type of equipment, plan on significantly more time.

Professional installers are highly recommended!

However, if you acquire the appropriate tools, obtain assistance, and follow the assembly steps sequentially, the process will take time, but is fairly easy.

Assembly Tips

Read all “Notes” on each page before beginning each step.

While you may be able to assemble the VDRA30 using the illustrations only, important safety notes and other tips are included in the text.

Some pieces may have extra holes that you will not use. Use only those holes indicated in the instructions and illustrations.

NOTE: To find out the length of a particular bolt, measure its shank (the long, narrow part beneath the head). Refer to the following diagram:

IMPORTANT!

Before you begin you should look at the quick reference guide that shows all hardware parts (in actual size) along with the corresponding key numbers on the assembly instructions.

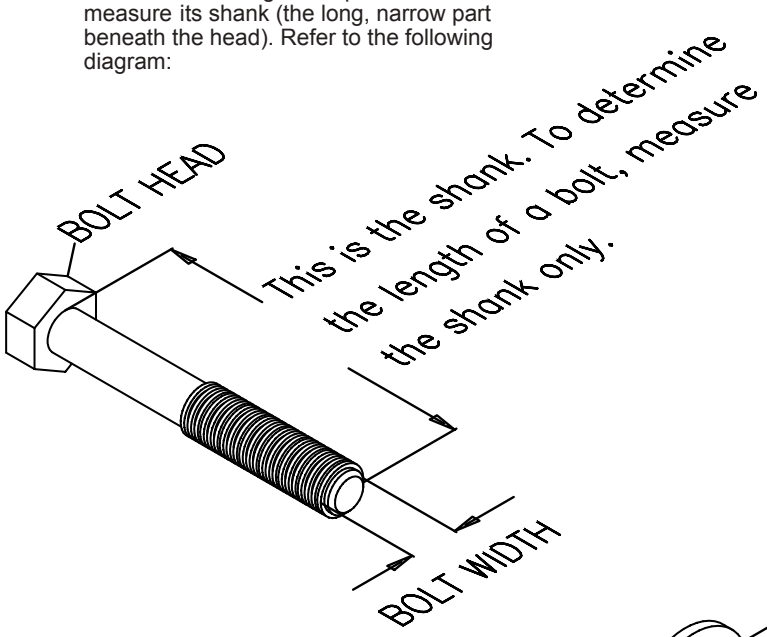

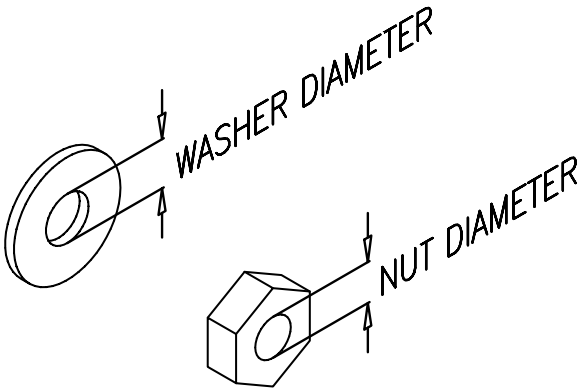

Do not fully tighten bolts until instructed to do so.

Note: **After assembly, you should check all functions to ensure correct operation. If you experience problems, first recheck the assembly instructions to locate any possible errors made during assembly. If you are unable to correct the problem, call the dealer from whom you purchased the machine or call 1-800-556-3113 for the dealer nearest you.**

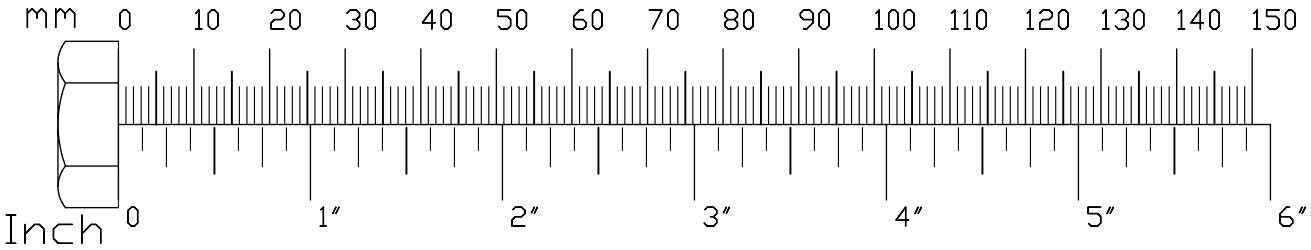

STEP

1

Be careful to assemble all components in the sequence they are presented.

NOTE:
Finger tighten all hardware in this step unless otherwise noted.

A. Insert Foot Caps (8) into Legs (B). *(pre-installed)*

B. Connect both Legs (B) to Main Body (A) using:
Four 11 (M8x40 hex head bolt)
Four 12 (M8 washer)

NOTE: Align Legs (B) in the same direction as shown in the diagram.

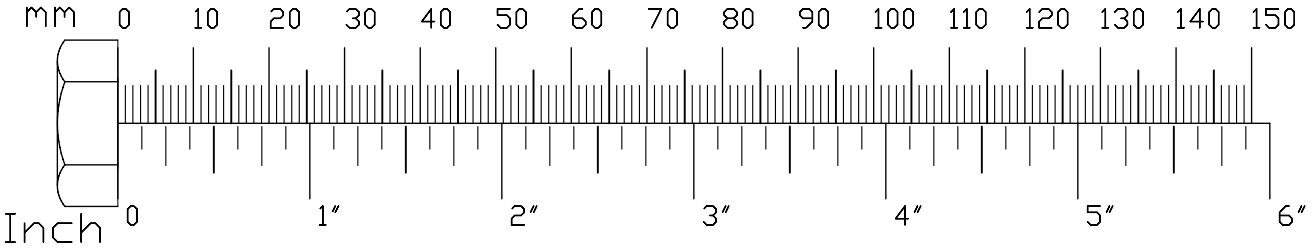

STEP 1

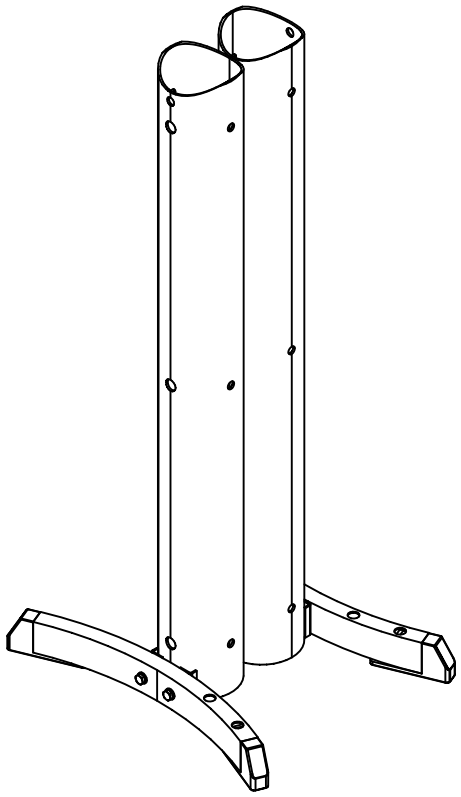

Above shows Step 1 assembled and completed.

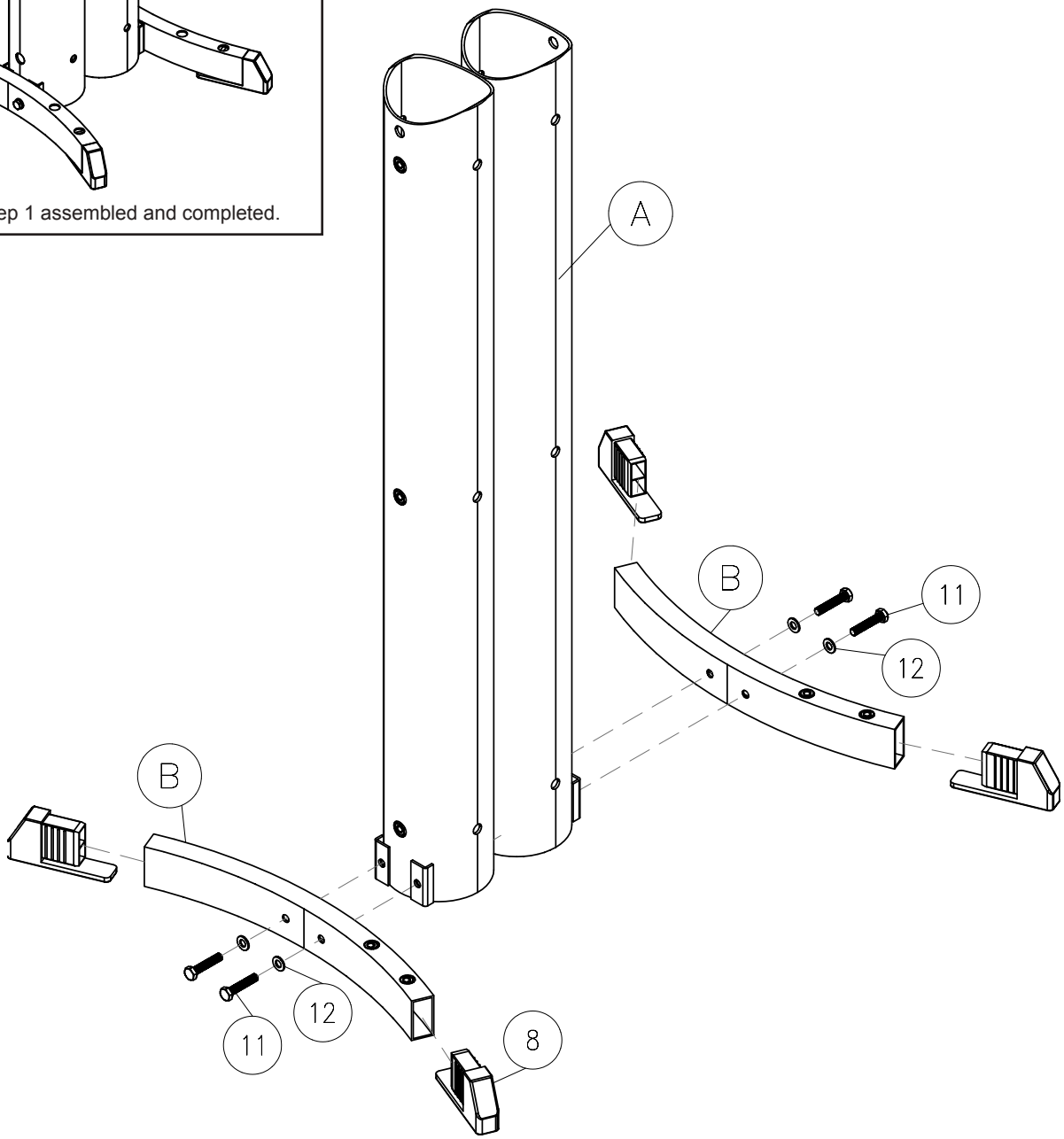

STEP

2

Be careful to assemble all components in the sequence they are presented.

NOTE:
Finger tighten all hardware in this step unless otherwise noted.

A. Connect Bar Shelf (C) to Legs (B) using:
Four 10 (M8x20 hex head bolt)
Four 12 (M8 washer)

B. Connect both Bent Hangers (D) to Main Body (A) using:
Six 10 (M8x20 hex head bolt)
Six 12 (M8 washer)

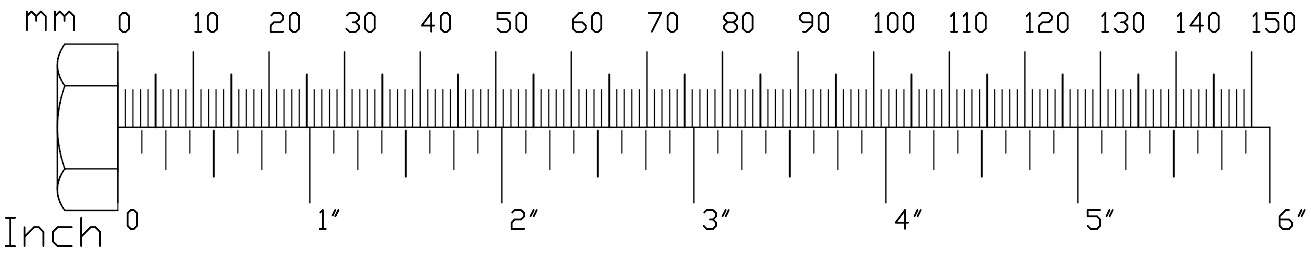

STEP 2

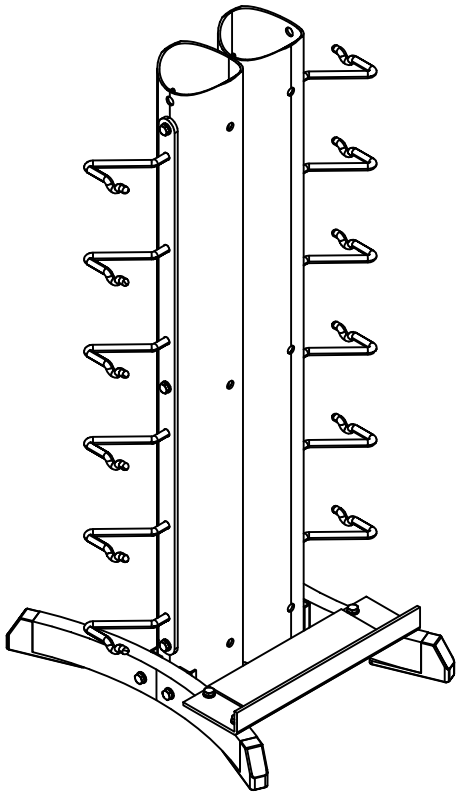

Above shows Step 2 assembled and completed.

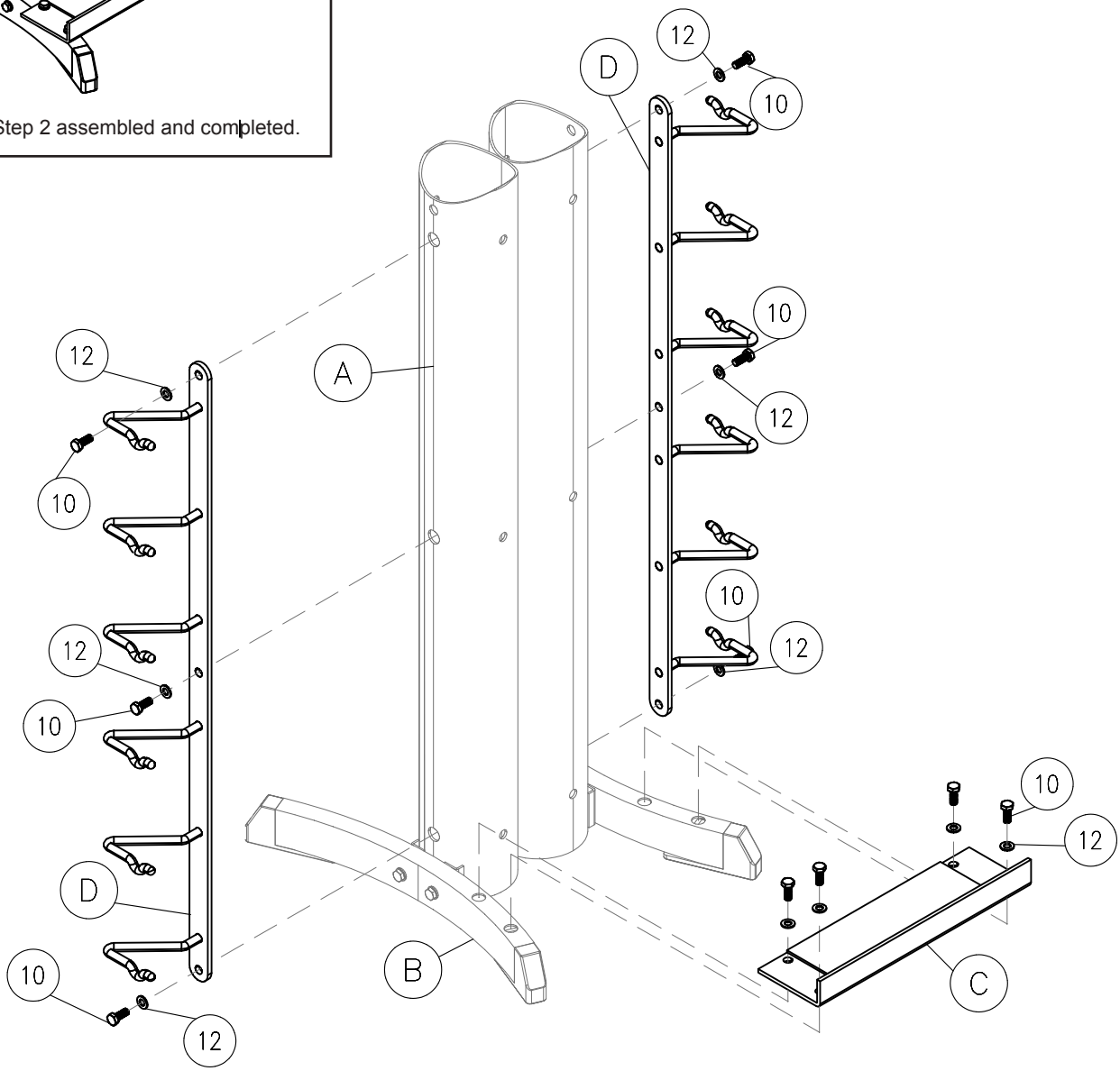

STEP

3

Be careful to assemble all components in the sequence they are presented.

NOTE:
Finger tighten all hardware in this step unless otherwise noted.

A. Connect both Straight Hangers (E) to Main Body (A) and Bar Catch (F) by using:
Two 13 (M10x140 hex head bolt)
Four 16 (M10x135 hex head bolt)
Twelve 15 (M10 washer)
Six 14 (M10 nylon nut)

B. Connect Top (G) to Main Body (A) using:
Two 10 (M8x20 hex head bolt)
Two 12 (M8 washer)

C. Make sure the unit is on a completely level surface.
Fully tighten all hardware at this time.

D. Enjoy your workout!

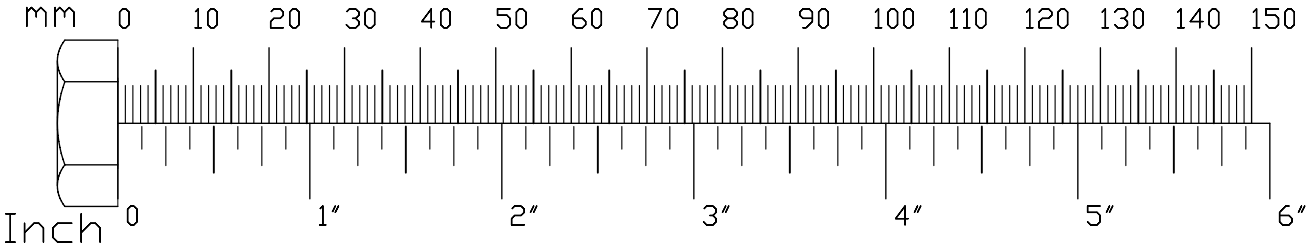

STEP 3

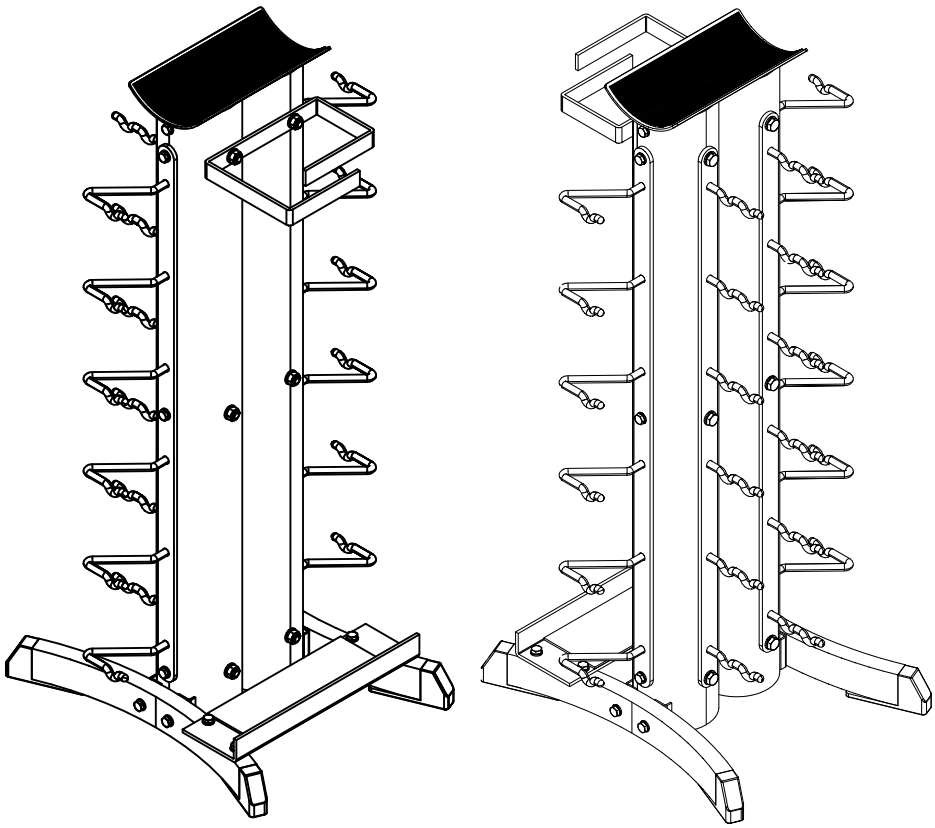

Above shows Step 3 assembled and completed.

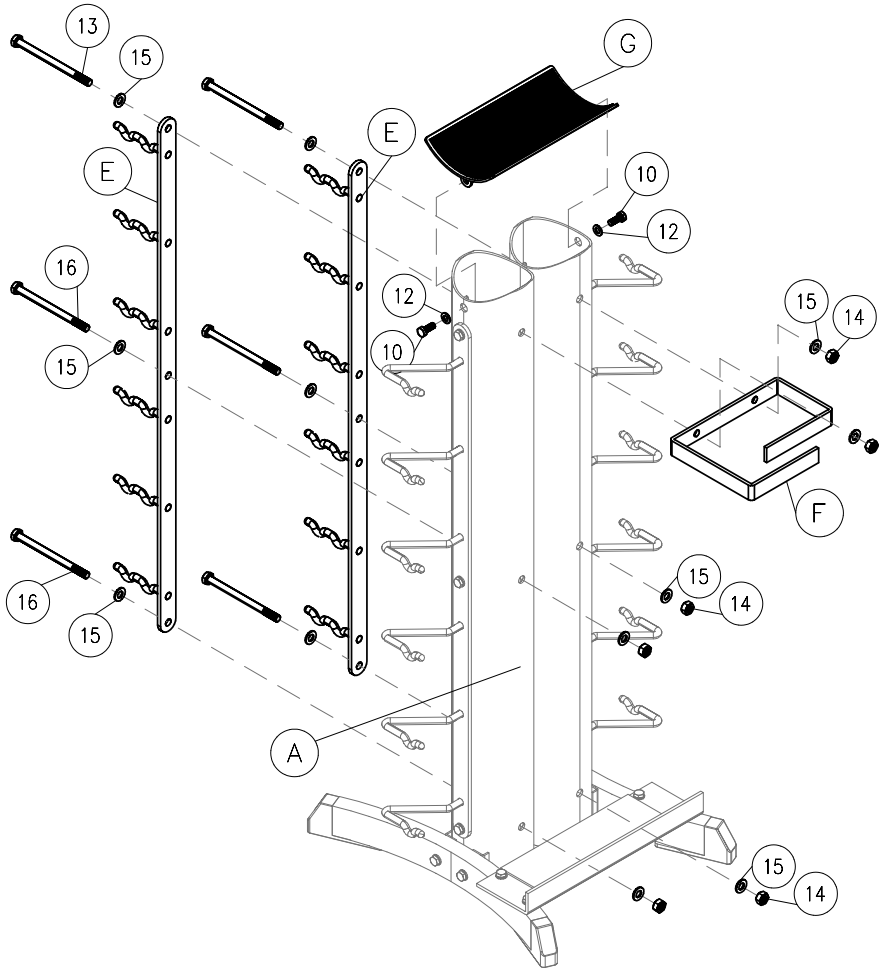

Hardware List

Part#	Qty	Description	
A	1	Main Body	
B	2	Leg	
C	1	Bar Shelf	
D	2	Bent Hangers	
E	2	Straight Hangers	
F	1	Bar Catch	
G	1	Top	
8	4	Foot Cap	
9	1	Rubber Pad	240mm x 130mm
10	12	Hex Head Bolt	M8x20
11	4	Hex Head Bolt	M8x40
12	16	Washer	M8
13	2	Hex Head Bolt	M10x140
14	6	Nylon Nut	M10
15	12	Washer	M10
16	4	Hex Head Bolt	M10x135
17	1	Rubber Pad	250mm x 95mm

Part numbers are required when ordering parts.

Hardware (To Scale)

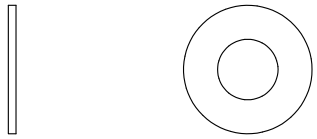

(12) M8 Washer QTY. 16

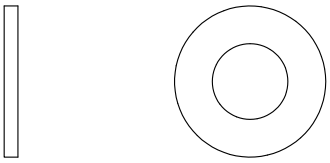

(15) M10 Washer QTY. 12

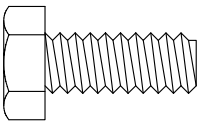

(10) HEX HEAD BOLT 8mm X 20mm QTY. 12

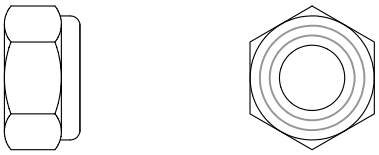

(14) M10 Nylon Nut QTY. 6

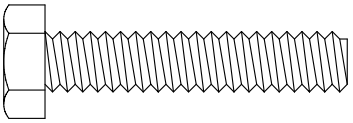

(11) HEX HEAD BOLT 8mm X 40mm QTY. 4

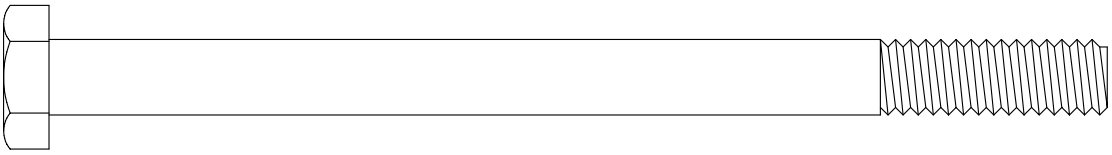

(13) HEX HEAD BOLT 10mm X 140mm QTY. 2

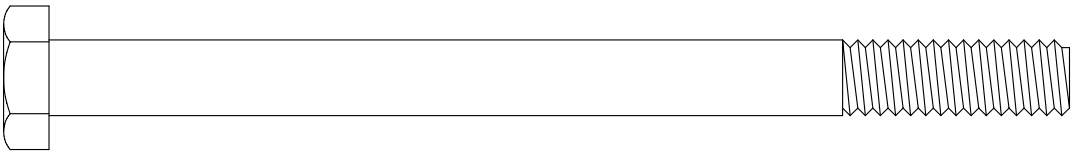

(16) HEX HEAD BOLT 10mm X 135mm QTY. 4

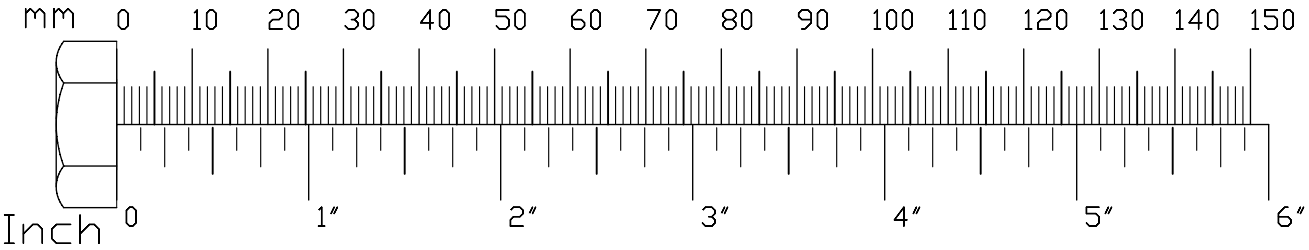

EXPLODED VIEW DIAGRAM VDRA30

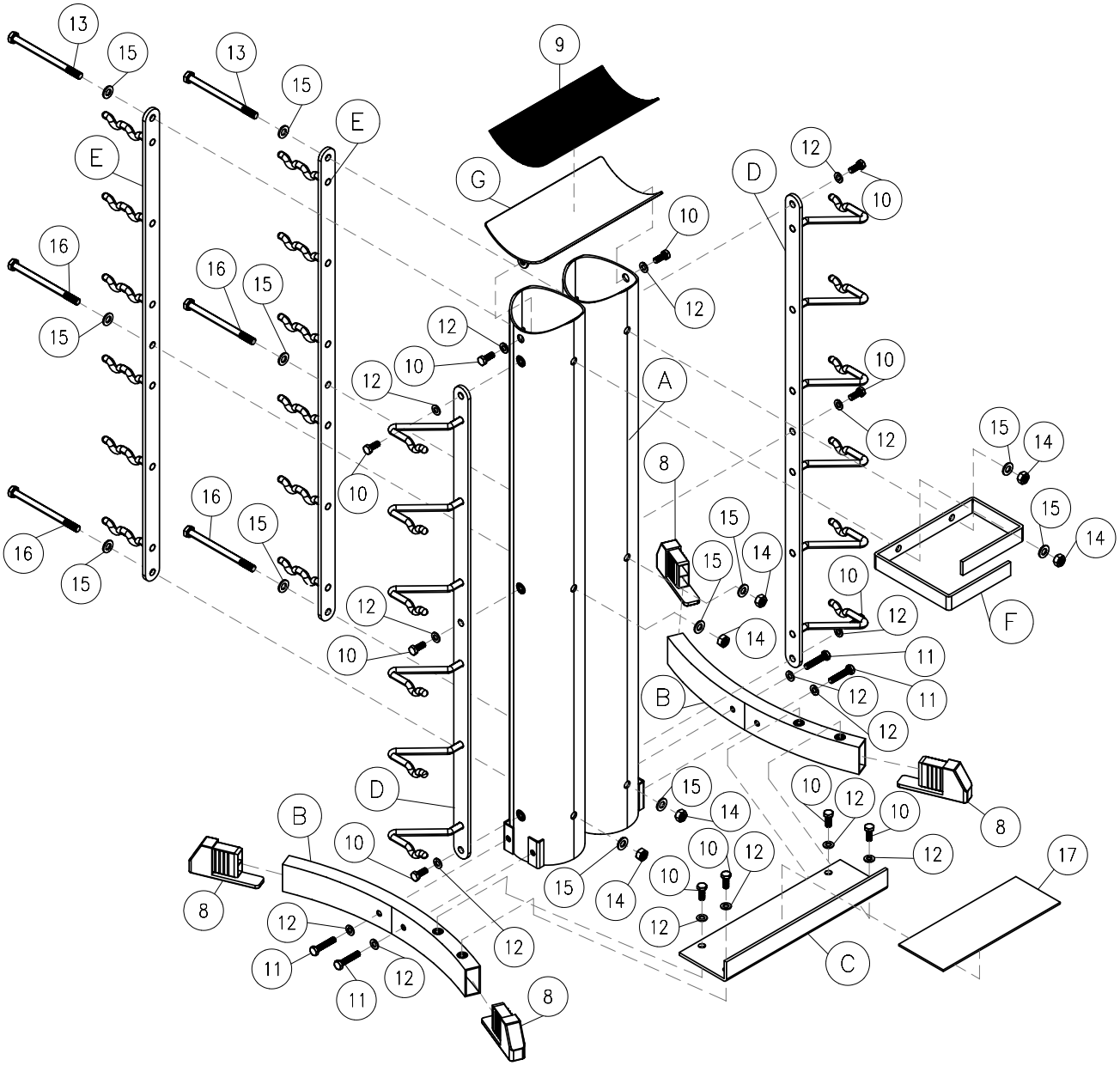

Body-Solid®
Built for Life

1900 S. Des Plaines Ave.
Forest Park, Il 60130
1 (800) 556-3113
Hours: M-F 8:30 - 5:00

www.bodysolid.com

© Copyright 2009. Body-Solid. All rights reserved. Body-Solid reserves the right to change design and specifications when we feel it will improve the product.
Body-Solid machines maintain several patented and patent pending features and designs. All rights reserved on all design patents and utility patents.