CAS600 AMPLIFIER

WHITE

The CAS600 is a fully DSP-enabled outdoor amplification system delivering a total of 600W between four channels. This system is designed to be used in exterior wall mount applications for outdoor speaker systems. It comes ready with dual 5P Line Level Inputs. The four programmable channels offer unrivaled control and flexibility. These amplifiers also feature full power sharing and an upgrade option for AES67 digital network architecture.

NOTES:

1. *This amplifier ships with the channels preconfigured for the CS speakers ordered with the system.*
2. *CAS should always be installed in a shady area if possible, and the lid should be fully screwed down to ensure waterproofing.*

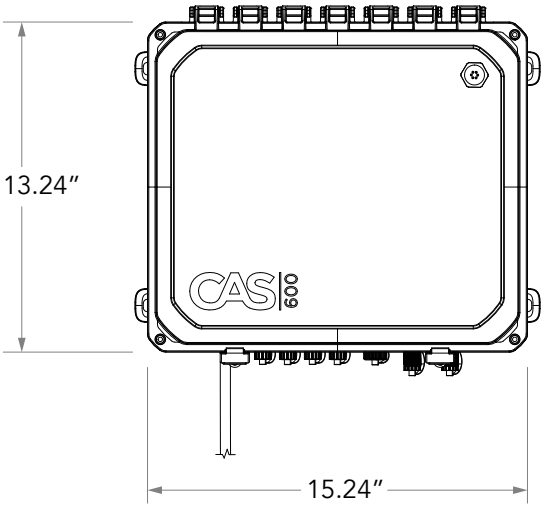

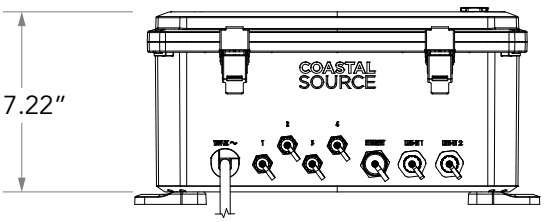

CAS600 AMPLIFIER SPECIFICATIONS

Dimensions: 13.24" x 15.24" x 7.22"

Weight: 18 lbs

Construction: Polycarbonate & Stainless Steel

Max Speakers: Up to 4x8 ohm speakers per channel and up to 2x8 ohm subs total

Frequency Response at 8 ohms: 20Hz-20kHz +/- 0.5 dB

Idle Power: 21W

Power In: 100-240 VAC @ 50-60Hz

Power Out: 600W

Impedance: Stable to 2 ohms

Mounting: Wall (brackets included)

Input: 2x 5P Line Level Connection or Digital (AES67 Option)

Output: 4x Coastal Connectors (CC)

*Visit CoastalSource.com/warranty for warranty details.

ORDERING INFORMATION

AMP	POWER
CAS	**600S**
	600 (INCLUDES AES67)

CAS — **600** e.g. **CAS600** = CAS600 Amplifier w/ AES67

ACCESSORIES

SKU	ITEM	
CxxLL5P	5-Pin Line Level Extension Cables	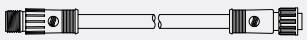
FMCRCA5P	5-Pin Line Level Cable Adapters (5P)	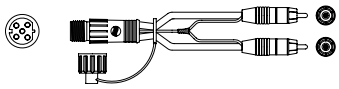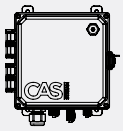
CASSTRM-SP	CAS Stream Ready for Sonos Port