Roomba® Plus 505

Combo robot + AutoWash™ dock

Owner's Guide

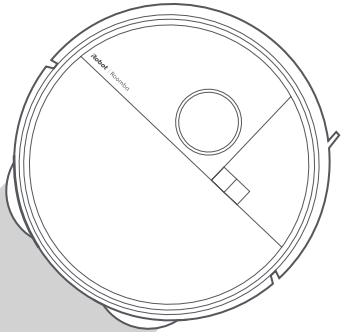

iRobot

Getting started

EN

1 Remove foam inserts behind bumper

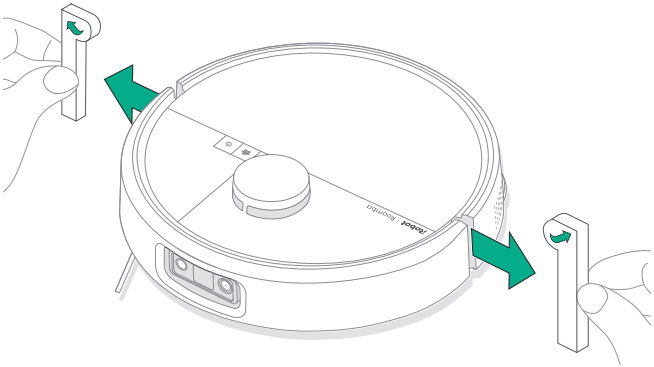

2 Install the Edge-Sweeping brush and mop pads

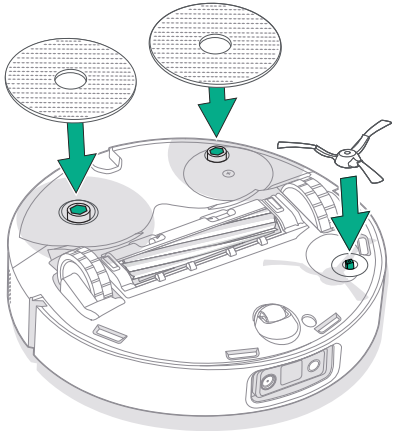

Align the Edge-sweeping brush and press down until you hear a click.

3 Install the dock ramp

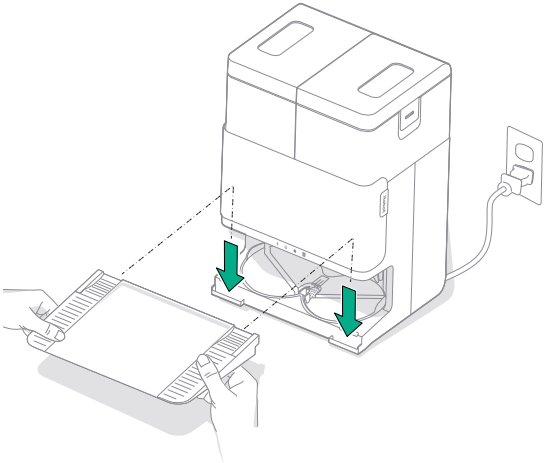

Install the removable ramp by aligning with the dock. Press down to snap into place.

4 Place the dock on hard surface flooring

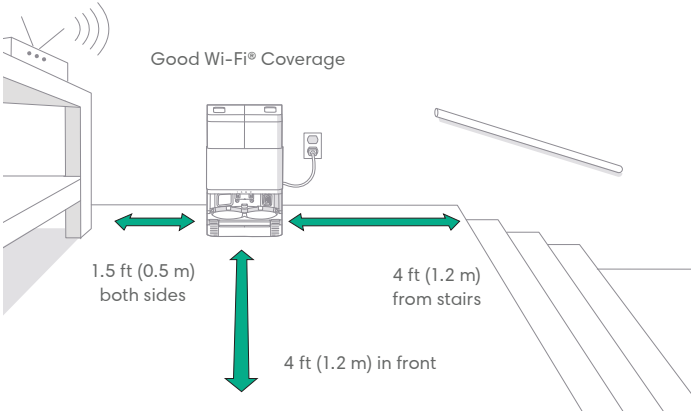

NOTE: Do not place it in direct sunlight. Ensure the area around the dock is free of clutter to improve docking performance.

WARNING: To prevent the risk of your robot falling down stairs, ensure that your dock is placed at least 4 feet (1.2 meters) away from stairs.

EN

EN

1 Prepare the clean water tank

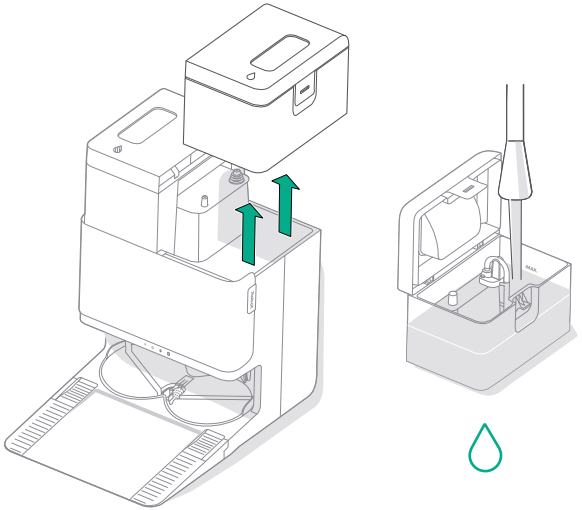

Remove clean water tank from the dock. Fill the clean water tank (right) with water and compatible cleaning solution if desired.

IMPORTANT: Only certain cleaning solutions can be safely used with your robot. A full list of compatible cleaning solutions can be found on **http://answers.irobot.com/s/roomba-combo-cleanser** or by visiting the app. Please do not use other cleaning solutions or bleach-based products.

2 Plug in the dock

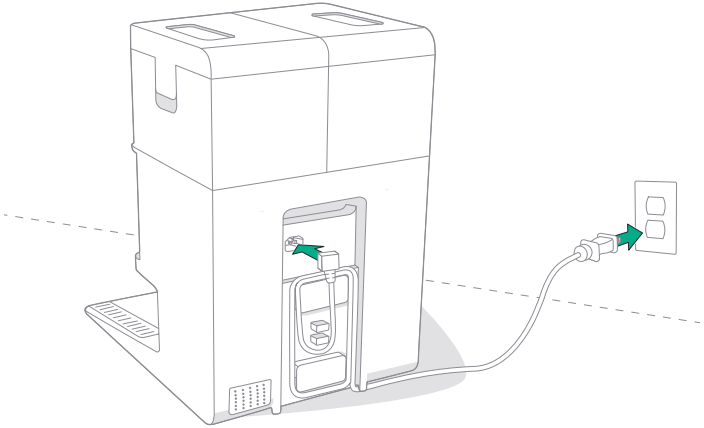

Plug the power cord into the wall. Wrap the cord back so it won't get in the way of the robot as it comes and goes.

3 Wake up the robot

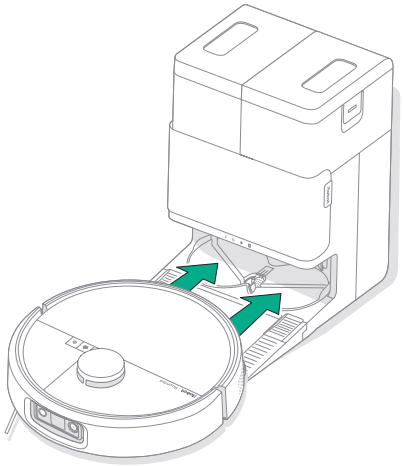

Place your robot in front of the dock, then slide it toward the dock, lining up the metal charging contacts. After a few minutes, a sound will let you know it's awake.

NOTE: Your robot comes with a partial charge, but we recommend that you charge the robot for up to 4 hours prior to starting the first cleaning.

To remove your robot from the dock, slide the robot towards you and then lift.

4 Download the Roomba® Home App

Scan the QR code with the camera on your mobile device or find the Roomba® Home App in your app store. The app will guide you through steps to setup your robot. Once your robot is set up in the app, you'll be able to:

- Control when, where, and how you clean
- Create automatic cleaning schedules
- Set custom cleaning preferences
- Unlock digital features
- Access tips, tricks, and answers to commonly asked questions

Download on the App Store

GET IT ON Google Play

IMPORTANT: Read enclosed safety information guide first before using your robot.

EN

About your Roomba® Plus 505 Robot

EN

Top View

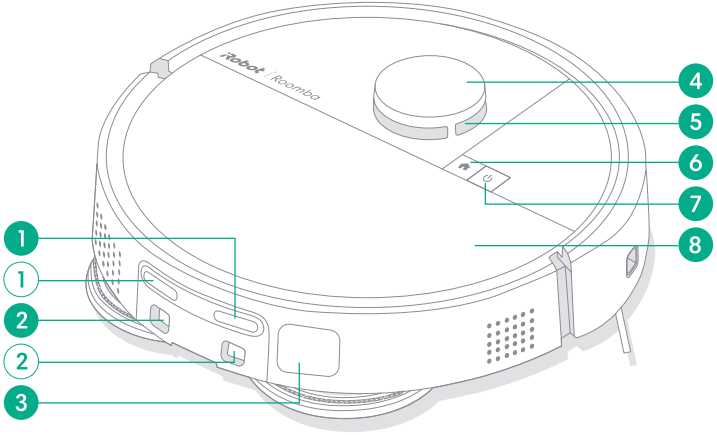

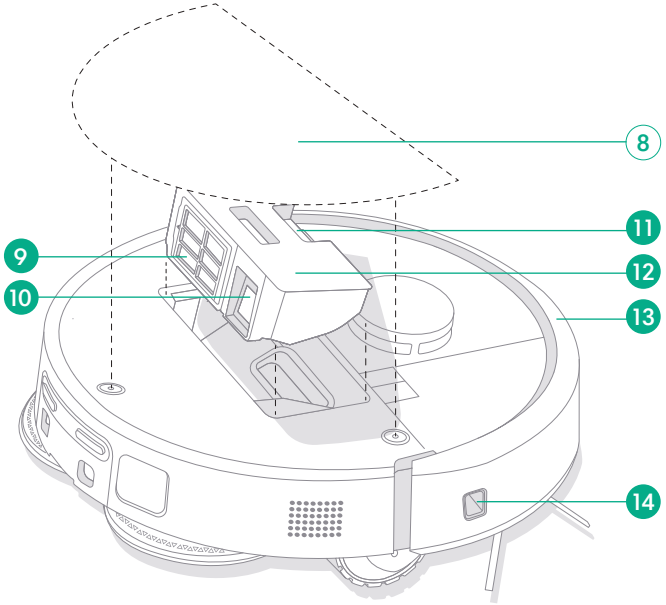

1 Charging Contacts
2 Dock Alignment Guides
3 Debris Evacuation Port
4 LiDAR Detector Bumper
5 ClearView™ LiDAR
6 Home Button
7 Power Button
8 Robot Top Cover
9 Filter
10 AutoEmpty™ Port or Debris Evacuation Port
11 Bin Release Button
12 Bin
13 Bumper
14 Wall Follow Sensor

Bottom View

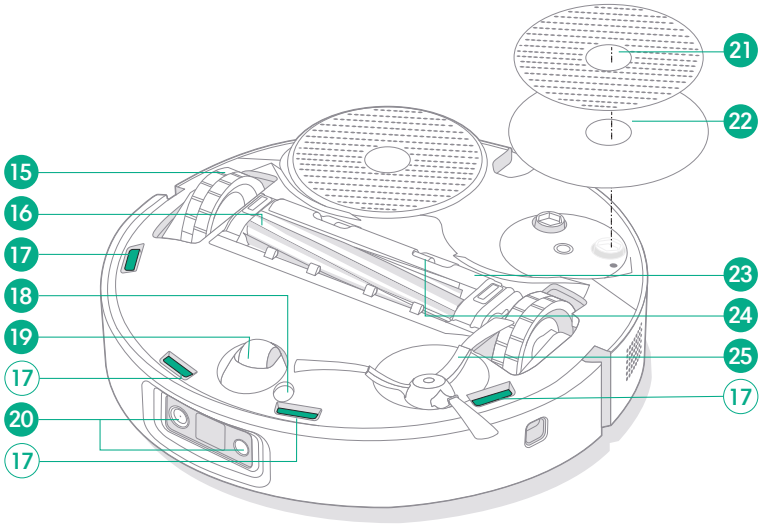

15 Wheel
16 Multi-Surface Brush
17 Cliff Sensors
18 Floor Type Sensor
19 Caster Wheel
20 Camera and Illumination LED
21 Mop Pad
22 Mop Pad Plate
23 Mop Pad Extendor
24 Brush Cover
25 Brush Cover Release Tab
26 Edge-Sweeping Brush

EN

About your AutoWash™ Dock

EN

Front View

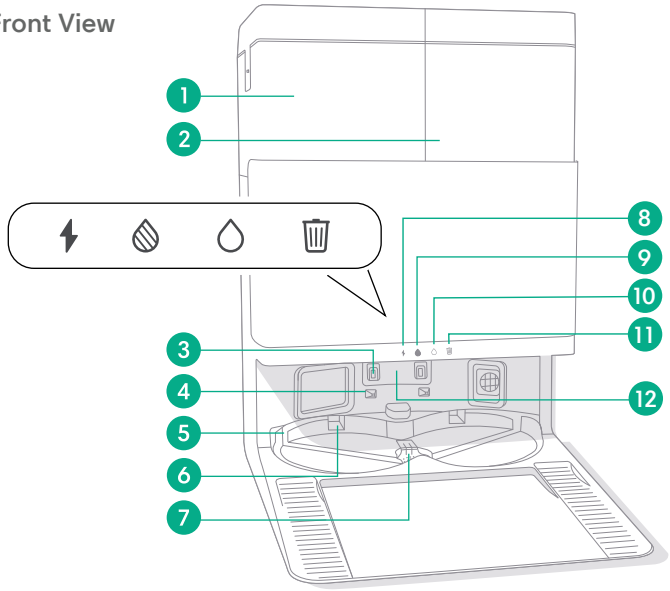

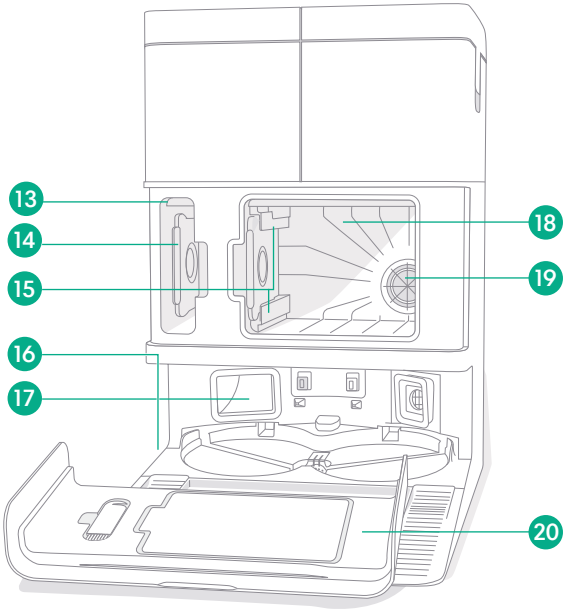

1 Dirty Water Tank
2 Clean Water Tank
3 Charging Contacts
4 Dock Alignment Guides
5 AutoWash™ Water Inlet
6 AutoWash™ Pad Dry recess
7 AutoWash™ Water drain
8 Trash Indicator
9 Dirty Water Tank LED Indicator
10 Clean Water Tank LED Indicator
11 Charging LED Indicator
12 IR Window
13 Debris Bag Storage
14 Extra Debris Bag
15 Debris Bag Guide Rails
16 Cleaning Brush Accessory
17 Debris Evacuation Port
18 Main Debris Cubby
19 Dock Filter
20 Cubby Door

Rear View

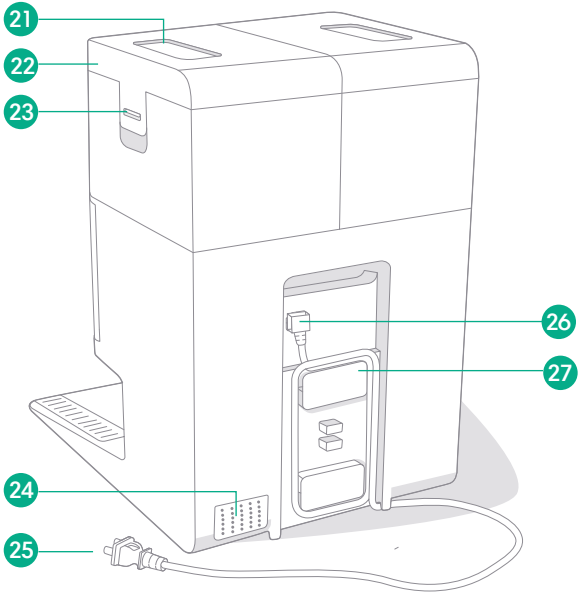

Top View

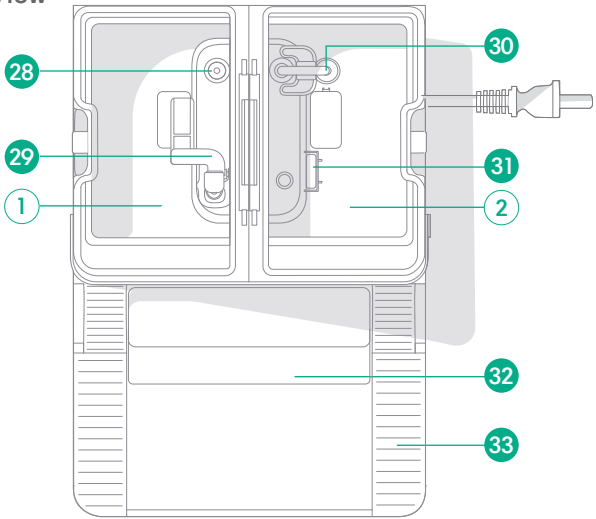

21 Water Tank Handle
22 Water Tank Lid
23 Water Tank Latch
24 Exhuast Vent
25 Removable Power Cord
26 Cord Attachment
27 Cord Wrap
28 Water Entry Point
29 Dirty Water Float
30 Clean Water Tubing
31 Clean Water Float
32 Removeable Ramp
33 Wheel Track

EN

Charging

Power Icon Indicator

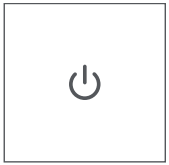

POWER Button

White - Fully charged and connected
Flashing White - Return to dock to charge
Pulsing White - Charging (low battery),
If you try to start cleaning while robot is charging with low battery, it will display a pulsing white light
Flashing Red - Low battery/Error

Charging during a cleaning routine

Your robot will return to the dock whenever it needs to recharge. Once it is sufficiently charged, it will then resume cleaning where it left off.

Standby mode

Your robot uses a small amount of power whenever it is on the dock. You can put it in a further-reduced power state when not in use by pressing for 10 seconds. To exit low power mode short press button.

Storing your robot

For long-term storage, turn off your robot by removing it from the dock and holding for 10 seconds. Store in a cool, dry place.

Dock Charging LED Indicators

On: Robot on dock charging
Off: robot not on dock, robot not charging, or dock is asleep

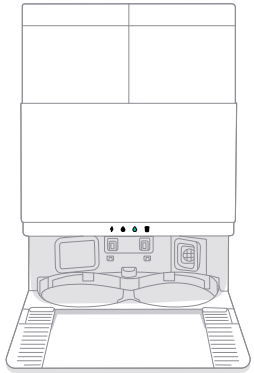

Solid White: When the robot is fully charged or in the process of charging. While the dock is automatically emptying the bin, during washing or drying cycles, and when the dock is in standby mode.

NOTE: Software updates may adjust the actual LED behavior on the robot and/or dock. Please visit global.irobot.com for the most up-to-date information.

Cleaning

Button Controls

HOME button: Tap to send the robot home
Press when running to pause
Press when paused to dock
Press when docking to stop

POWER button: Tap to Start / Pause / Resume a job
Hold for 3 seconds to turn on
Hold for 10 seconds to turn off

Dock Cleaning LED Indicators

Solid red: **Dust** bag full, missing, or improperly installed

Solid red: dirty water tank full, missing, or improperly installed

Solid red: clean water tank empty, missing, or improperly installed

NOTE: It is highly recommended to use the Roomba® Home App for cleaning control. The mobile app can be used to clean specific rooms, setup cleaning routines, and create automations/schedules.

Cleaning Pattern

Your robot will automatically explore and clean your home in neat rows. It will return to the dock at the end of a cleaning routine, or whenever it needs to recharge.

Tips:
- Remove excess clutter from floors before cleaning.
- Use your robot frequently to maintain well-conditioned floors.

After 90 minutes of inactivity off the dock, your robot will automatically end its cleaning. If you are unsure if it is finished or paused, visit the **Roomba® Home App** to check on its status.

Spot clean

Tap ⏻ button two times to spot clean a designated area. After spot clean is complete, your robot will end the job. Press 🏠 To send it back to its dock.

AutoEmpty™

Your robot will automatically empty its dust bin at the end of every cleaning routine.

NOTE: Roomba robots are generally designed to be used on most floor types for vacuuming. We do not recommend using mopping functions on unsealed hardwood floors and certain laminate/vinyl planks due to potential water damage to the flooring and/or subfloor. For more info, please visit global.irobot.com..

EN

EN

Starting a cleaning routine from your dock

If the clean water tank and dirty water tanks are ready, skip to step 5. If the Clean Tank or Dirty Tank LED Indicators are on:

1 Lift to remove the tank that requires maintenance.

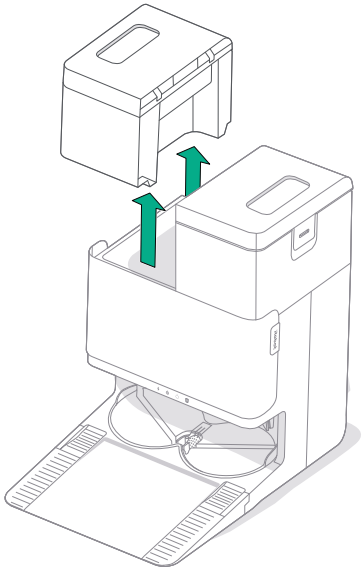

2 Lift the latch on the tank to open.

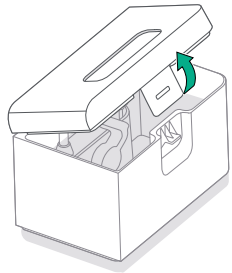

3 Empty the Dirty Tank. Fill the Clean Tank with water.

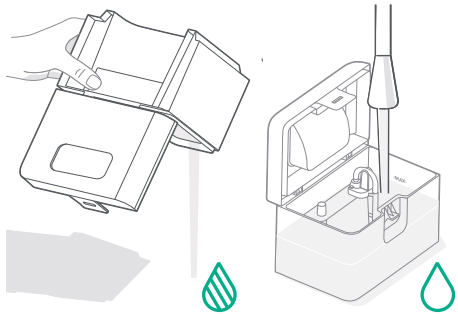

4 Close and latch the water tank lids. Place tanks back on the dock.

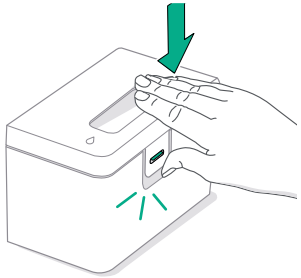

5 With mop pads attached, return the robot to the AutoWash™ dock and use the app or press the ⏻ button on your robot.

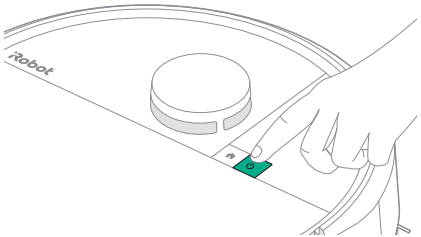

IMPORTANT: Ensure the latch is properly closed before reinstalling.

Pad Washing and Pad Drying

Your robot will return to its dock for pad washing as needed during cleaning routines and then again when cleaning is complete.

Pad drying will only take place at the end of its cleaning routine.

IMPORTANT: Do not interrupt the robot while Pad Washing is active. It is normal to hear noises throughout this process as the pads spin and the Pad Washing Basin is filled and drained.

Once complete, the dock will proceed to dry the mop pads by blowing hot air over them.

NOTE: The drying process can last for a few hours. You can choose from different drying times in the app. You may hear a low hum coming from the dock while the dryer is active.

Visit the Roomba® Home app to manually start Pad Washing, start or stop Pad Drying, or to customize pad washing settings.

EN

EN

Care and maintenance for your robot

To keep your robot at optimal performance, make sure you periodically perform the following basic care & maintenance. There are additional instructional videos in the Roomba® Home App. If you notice your robot picking up less debris from your floor, empty the bin, clean the filter, and clean the brushes.

Part	Care Frequency	Replacement Frequency*
Dust bin	Clean bin as needed	-
Filter	Clean once a week (twice a week if you have a pet)	Every 3-6 months
Edge-Sweeping Brush	Clean every 2 weeks or as needed	Every 3-6 months
Multi-Surface brush	Clean once a week	Every 6-12 months
Front caster wheel	Clean every 2 weeks or as needed	-
Charging contacts	Clean every 2 weeks or as needed	-
Sensors	Clean once a month or as needed	-
Mop pad	Auto cleans after mopping	Every 180 hours of cleaning
Brush cover	Inspect every 6 months	Replace if worn or damaged

* Replacement frequency may vary. Parts should be replaced if visible wear appears. If you think you need a replacement part, please contact iRobot Customer Care for more information.

Cleaning the Edge-Sweeping brush

Pull to remove the edge-sweeping brush. Remove any hair or debris using the cleaning brush, then reinstall the edge-sweeping brush.

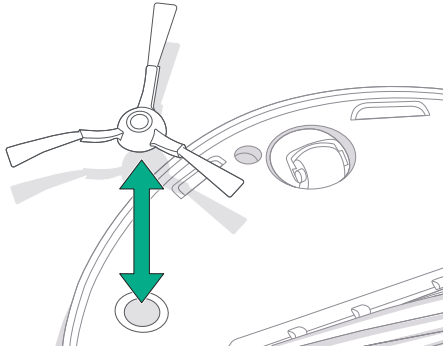

IMPORTANT: It is recommended to replace the edge-sweeping brush every 3–6 months for optimal cleaning performance.

Cleaning the Multi-Surface Brush

EN

1 Press the brush cover release tabs and lift to remove brush cover.

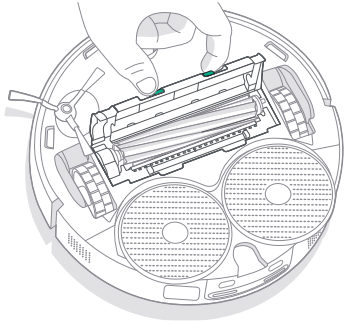

2 Remove the multi-surface brush.

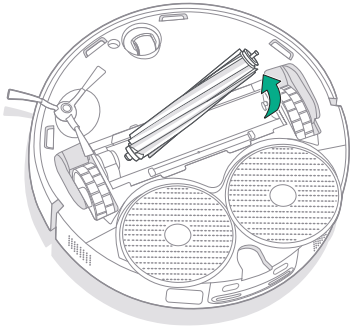

3 Remove any hair debris from the multi-surface brush using the cleaning brush.

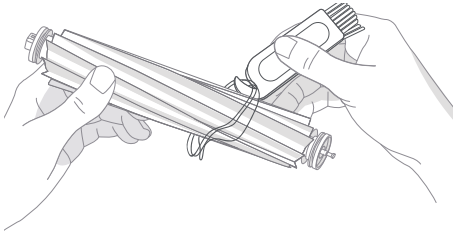

4 Reinstall the multi-surface brush and brush cover in the robot.

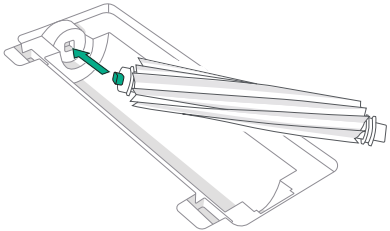

NOTE: For instructions to perform a deeper cleaning of the multi-surface brush, see **global.irobot.com**

IMPORTANT: It is recommended to replace the multi-surface brush every 6-12 months for an optimal cleaning performance.

EN

Cleaning the Filter and Bin

1 Remove robot top cover by lifting up.

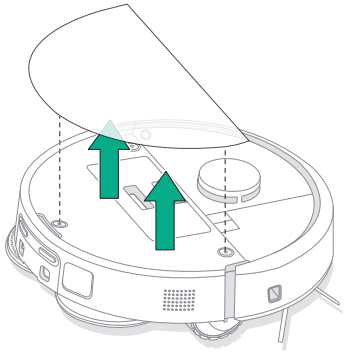

2 Press the dust bin release buttons to remove dust bin.

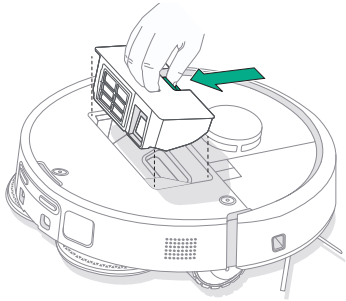

3 Remove filter.

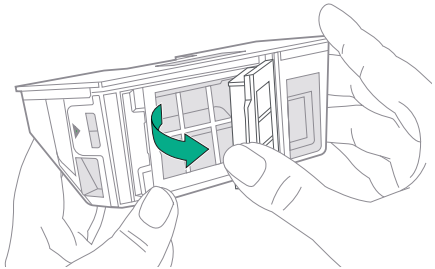

4 Clean debris from filter with cleaning brush.

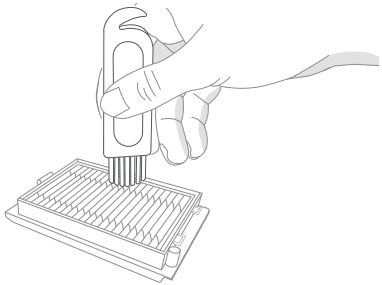

5 Open bin door. Empty and clean debris from dust bin and filter with cleaning brush or a clean cloth. Close Bin door.

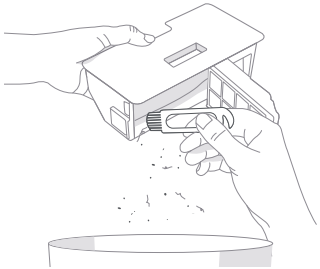

6 Reinsert filter.

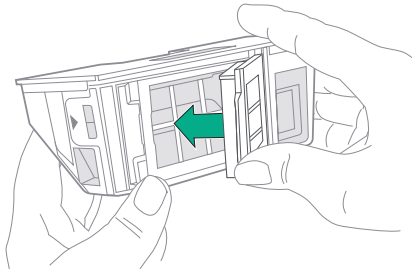

7 Place bin back in the robot.

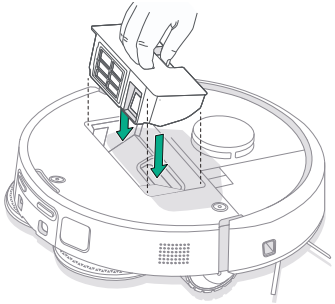

8 Return robot top cover

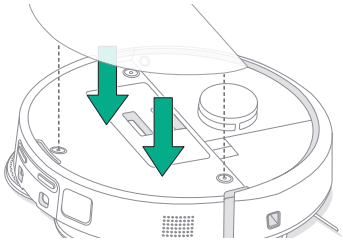

NOTE: If you place your robot on the dock by hand, it will not empty automatically. In this case, use the Roomba® Home App or hold the ⏻ button down for 2-5 seconds.

Washing the Bin

1 Release the bin, remove the filter, and open the bin door.

2 Rinse the dust bin using warm water.

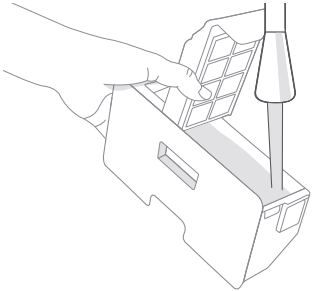

3 Make sure bin is completely dry. Reinsert filter and place bin back in the robot.

IMPORTANT: The bin is not dishwasher safe.

IMPORTANT: To achieve optimal performance with your robot and dock, clean and/or replace your robot's filter as needed.

EN

EN

Cleaning the Front Caster Wheel

Use the cleaning brush to remove hair and debris from the front caster wheel.

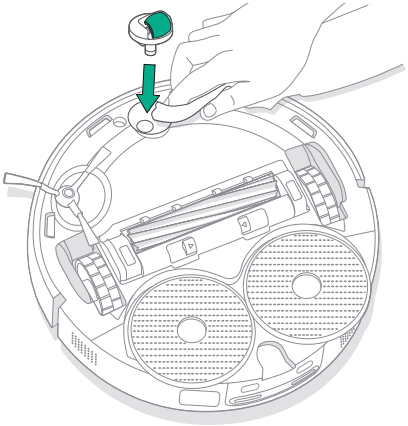

IMPORTANT: A front wheel clogged with hair and debris could result in damage to your floor. If the wheel is not spinning freely after you have cleaned it, please contact Customer Care.

Cleaning the Charging Contacts, Sensors, and Camera Window

Remove the robot from the dock and wipe charging contacts and sensors with a clean, dry cloth or lightly dampened melamine foam.

CHARGING CONTACTS

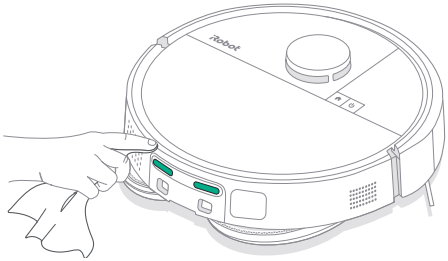

SENSORS

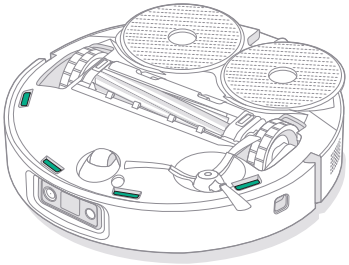

IMPORTANT: Do not spray cleaning solution or water onto the sensors or sensor openings.

Care and maintenance for your dock

To keep your dock running at optimal performance, perform the procedures on the following pages.

Part	Care Frequency	Replacement Frequency*
Charging contacts	Clean once a month	-
Sensors	Clean once a month	-
IR window	Clean once a month	-
Bags	-	Bags should be replaced when full - prompted by the LED indicator on the dock and/or Roomba® Home App
Clean tank	Rinse and refresh water as needed	-
Dirty tank	Rinse and empty as needed	-
Pad washing basin, Liquid overflow basin	Clean if visibly dirty, once a month	-
Ramp	Clean if visibly dirty	-

* Replacement frequency may vary. Parts should be replaced if visible wear appears. If you think you need a replacement part, please contact iRobot Customer Care for more information.

Cleaning the Pad Washing System

1 Wipe out the Pad Washing Basin with a clean dry cloth. Ensure there are no obstructions in the drainage port. Mild soap and a sponge may be used for stubborn debris.

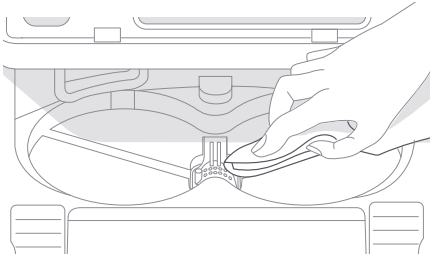

EN

EN

Replacing the Bag

1 Pull the cubby door towards you and up to remove

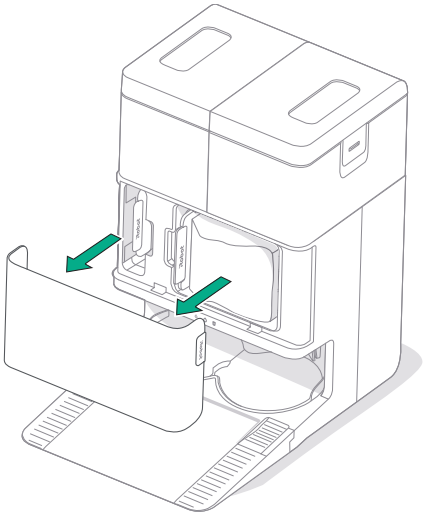

2 Slide the card out. When pulled, the bag will self-seal so dust and debris cannot escape.'

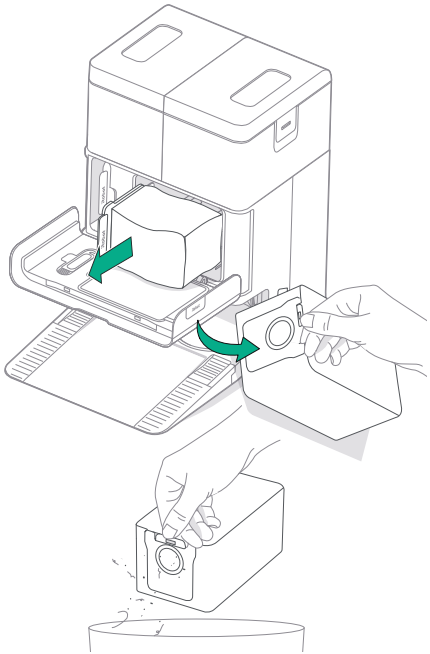

3 Install a new bag by sliding the card into the guide rails.

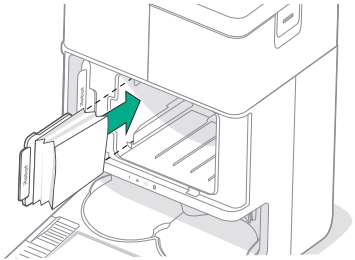

4 Replace the Cubby door. Make sure that it's correctly aligned.

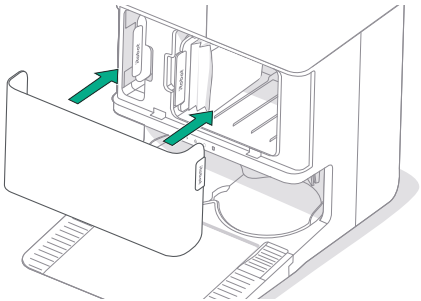

Cleaning the Charging Contacts and IR Window

Inspect the components to make sure that they are clear of debris. Wipe with a clean, dry cloth.

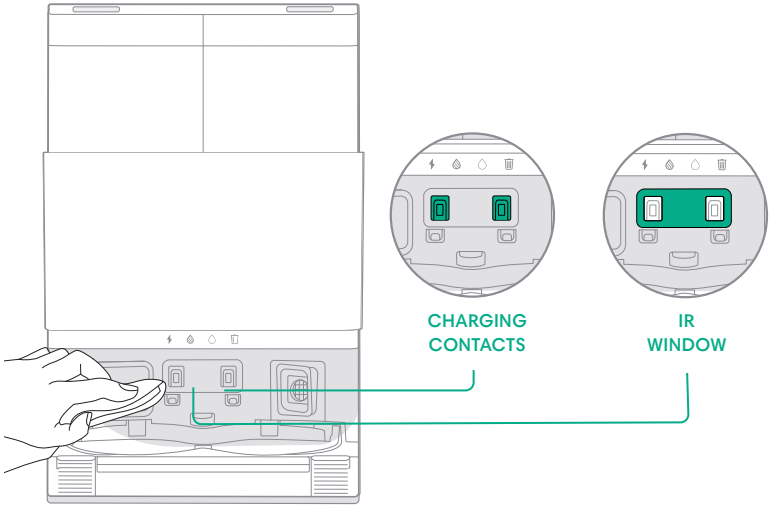

IMPORTANT: Do not spray cleaning solution or water onto the sensors or sensor openings.

Removing Debris from Dock Filter

Inspect dock filter for any lint or debris build-up, and wipe with a clean dry cloth to remove.

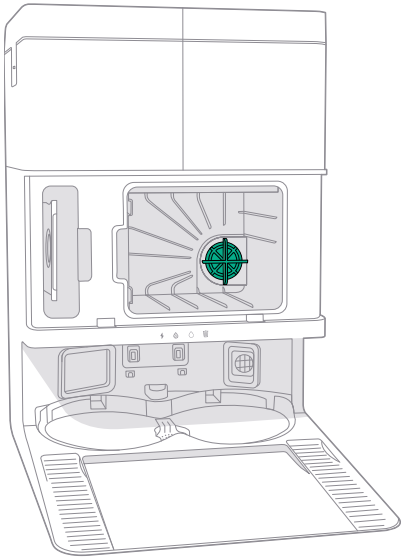

EN

Washing the Water Tanks

EN

1 Remove both water tanks.

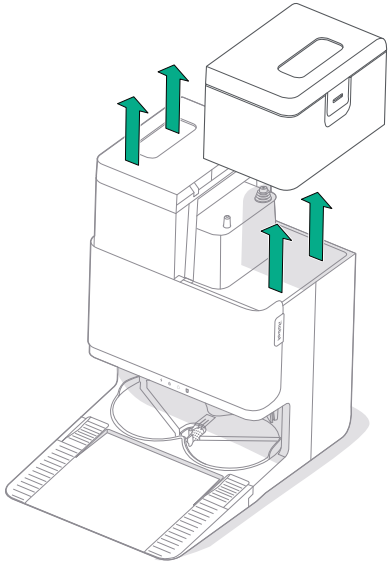

2 Lift the latch on the water tanks to open.

3 Empty Dirty Water tank.

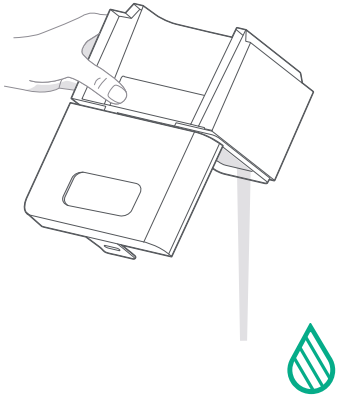

4 Rinse both water tanks using warm water. Mild soap and a sponge may be used for stubborn debris.

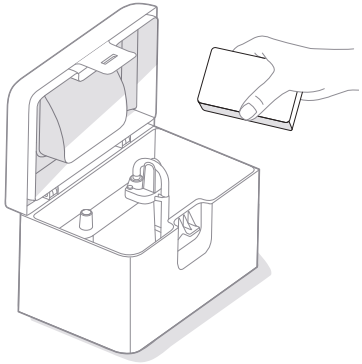

5 Refill the clean water tank with water. Leave the dirty water tank empty.

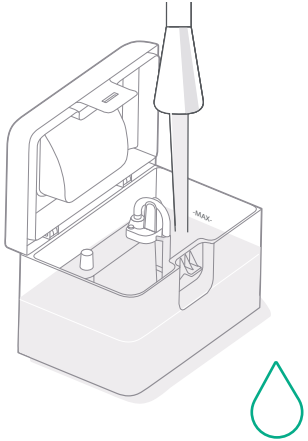

6 Reinsert both water tanks

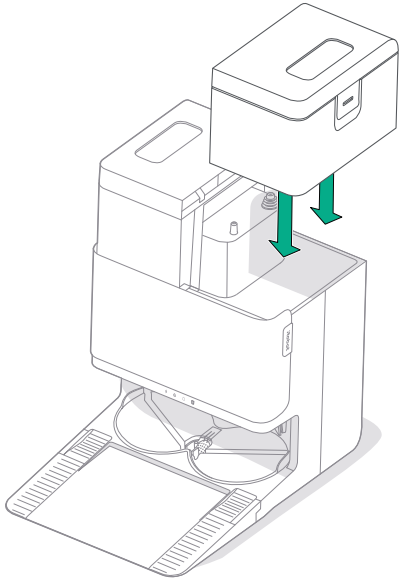

IMPORTANT: Water tanks are not dishwasher safe.

IMPORTANT: Ensure the latch is properly closed on the water tanks before reinstalling.

EN

Troubleshooting

Troubleshooting your robot

Your robot will alert you if something is wrong with a voice announcement or audio alert. The Roomba® Home App will also provide notifications with steps to troubleshoot any issues.

If you are unsure if the robot is finished or paused, consult the Roomba® Home app to check on its status.

Factory Reset

To factory reset press for 5 seconds and then (within 5 seconds) press + for 5 seconds.

BATTERY SAFETY & SHIPPING

WARNING: Lithium ion batteries and products that contain lithium ion batteries are subject to stringent transportation regulations. If you need to ship this product for service, travel or any other reason, you MUST follow the below shipping instructions.

- Battery MUST be turned off before shipping.
- Turn off the battery by removing the robot from the dock and holding down the button for 10 seconds. Press the bumper in for 10 seconds while holding the button. All indicators will then turn off.
- Package the robot securely for shipping.

If you need further assistance, please visit your Roomba® Home app, contact our Customer Care team or visit **global.irobot.com.**

Troubleshooting your dock

Your dock will tell you if something is wrong via LED indicators on the front of the canister and through the Roomba® Home App. If the dock is not performing as expected, check the Roomba® Home app for errors.

LED indicator	Common error	How to fix
Solid red	Bag full or missing	Replace bag if it is full or missing. Make sure that the bag is securely inserted. If problem persists, remove any debris from the port on the bottom of your robot and dock.

This product has been equipped with a thermal protector designed to protect against damage due to overheating. If the protector operates, the motor will stop running. If this happens, unplug the unit, allow it to cool for 30 minutes, clear any obstructions from the evacuation port and evacuation tube, then plug the unit back in.

Need further assistance? We're here to help.

Download the Roomba® Home App or visit **global.irobot.com** for product support or to contact your local support center. If you need further assitance in the US & Canada, call the US Customer Care team at (877) 855-8593.

iRobot USA Customer Care Hours
Monday to Friday, 9AM — 9PM Eastern Time
Saturday and Sunday 9AM — 6PM Eastern Time

Satety Information

Please see the safety guide that came with your robot, or visit global.irobot.com

WC# 4851438 vA

©2025 iRobot Corporation, 8 Crosby Drive, Bedford, MA 01730 USA. All rights reserved. iRobot, Roomba, and Roomba Combo are registered trademarks of iRobot Corporation. AutoEmpty and AutoWash are trademarks of iRobot Corporation. Wi-Fi and the Wi-Fi logo are registered trademarks of Wi-Fi Alliance. Apple and App Store are trademarks of Apple Inc., registered in the U.S. and other countries. Google Play is a trademark of Google LLC.