Elise

36 Induction

Owner's Guide

User & Installation Instructions

READ THESE INSTRUCTIONS FULLY BEFORE USE
SAVE THESE INSTRUCTIONS FOR FUTURE REFERENCE

AGA

U111348-03

WARNING!

The anti-tip device supplied with this range must be installed when the appliance is installed. This will reduce risk of tipping of the appliance from abnormal usage or by excessive loading of the oven door.

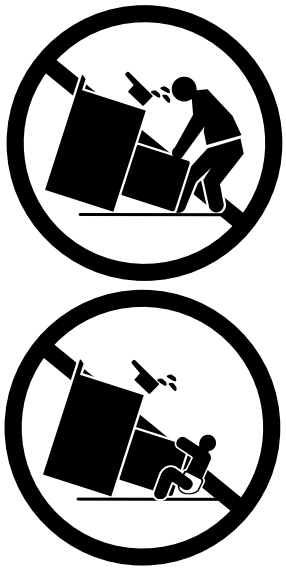

⚠WARNING!

- **ALL RANGES CAN TIP.**
- **INSTALL ANTI-TIP BRACKET PACKED WITH RANGE - SEE INSTALLATION INSTRUCTIONS.**
- **A CHILD OR ADULT CAN TIP THE RANGE AND BE KILLED.**
- **ENGAGE THE RANGE TO THE ANTI-TIP DEVICE - SEE INSTALLATION INSTRUCTIONS.**
- **RE-ENGAGE THE ANTI-TIP DEVICE IF THE RANGE IS MOVED.**
- **FAILURE TO DO SO CAN RESULT IN DEATH OR SERIOUS BURNS TO CHILDREN OR ADULTS.**

The following symbols are related to Safety and are used on the product and throughout this manual.

Meaning / Description	Symbol
WARNING / CAUTION An appropriate safety instruction should be followed or caution to a potential hazard exists.	
DANGEROUS VOLTAGE To indicate hazards arising from dangerous voltages.	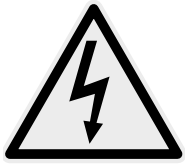
PROTECTIVE EARTH (GROUND) To identify any terminal which is intended for connection to an external conductor for protection against electric shock in case of a fault, or the terminal of a protective earth (ground) electrode.	

Meaning / Description	Symbol
HEAVY This product is heavy and reference should be made to the safety instructions for provisions of lifting and moving.	
DISCONNECT MAINS SUPPLY Disconnect incoming supply before inspection or maintenance.	

Contents

1. Important safety information 1

2. Range overview 6

Cooktop 6
Cooktop control indications & warnings 7
Pan detector, 7
Residual heat indicator, H 8
Automatic heat-up, A 8
Child lock, L 8
Low temperature/simmer setting, L1/L2/L3 9
Power boost setting, P 9
The Bridging-Zone Function 10
Overheat function 10
The Multifunction Oven 11
Operating the oven 12
Accessories 14
Oven light 15
Storage 15

3. Cooking tips 16

4. Cooking table 17

5. Cleaning your range 19

6. Troubleshooting 22

7. Installation Instructions 24

8. Service and parts 25

9. Installation safety instructions 26

10. Installation 27

Positioning the range 28
Moving the range 29
Removing the door 29
Lowering the two rear rollers 29
Leveling 30
Anti-tip device 30
Fitting the anti-tip device 30
Wall fixing 31
Installing the toe kick 31
Side panel extension kit *(optional extra)* 31

11. Electrical connection 32

12. Final fitting and checks 36

Fitting the drawer 37
Removing the drawer 37

13. Circuit diagram 38

Cooktop 38
Oven 39

14. Technical data 40

1. Important safety information

Have your appliance properly installed and grounded by a qualified technician. The installation must conform with local codes or, in the absence of local codes, in accordance with the National Electrical Code ANSI/NFPA 70 or the Canadian Electric Code, CSA C22.1.

Install only as described in the installation section of this book.

Ask your dealer to recommend a qualified technician and an authorized repair service. Know how to disconnect the power to the range at the circuit breaker or fuse box in case of an emergency.

The anti-tip device supplied with this range must be installed when the appliance is installed. This will reduce risk of tipping of the appliance from abnormal usage or by excessive loading of the oven door or storage drawer.

Leaning, sitting or stepping on the doors or drawer of this range can result in serious injuries and also cause damage to the range. **DO NOT** allow anyone to climb, stand or hang on any part of the range.

Be sure your appliance is properly installed and grounded by a qualified technician.

Important safety notice and warning

IMPORTANT INFORMATION - If you are wearing a medical device (such as a pacemaker), consult your doctor. The operation of the appliance may affect a medical device.

Prior to connecting, the power cord should be inspected for any damage. In the event of damage please consult your electrical installer.

You must provide adequate clearances between the range and adjacent combustible surfaces. Refer to Installation Instructions.

Save the installation instructions for the local electrical inspector's use.

In case of fire

DO NOT use water on grease fires. NEVER pick up a flaming pan. Turn the controls off. Smother a flaming pan on a cooktop burner by covering the pan completely with a well fitting lid or baking tray. Isolate the power source, where it is safe to do so, either at the control or isolator. If available use a multipurpose dry chemical or foam-type fire extinguisher.

If fire is in an oven pan, smother by closing oven door. Open doors and windows or if a hood is installed turn it on to remove smoke and odor.

To prevent fire or smoke damage

Before using the range make sure all the packing materials have been removed.

Always keep the area around the range free from combustible materials, gasoline, and other flammable vapors and liquids.

NEVER leave any items on the range cooktop. The hot air from an oven vent may ignite flammable items and may increase pressure in closed containers, which may cause them to burst. Many aerosol-type spray cans are EXPLOSIVE when exposed to heat and may be highly flammable. Avoid their use or storage near an appliance.

Many plastics will burn and most are damaged by heat. Keep plastic items away from parts of the range that may become warm or hot. **DO NOT** leave plastic items on the cooktop as they may burn, melt or soften if left too close to a vent or a lighted burner.

Storage should not be installed directly above a range. If anything is stored above the range, it should be limited to infrequently used items, which can be safely stored in an area subjected to heat from a range. Temperatures may be unsafe for some items such as volatile liquids, cleaners or aerosol sprays.

Destroy the carton and plastic bags after unpacking the range. **NEVER** allow children to play with packaging material.

NEVER use this appliance as a space heater to heat or warm the room. Doing so may result in carbon monoxide poisoning and overheating of the oven.

NEVER cover any slots, holes or passages in the oven bottom or cover an entire rack with materials such as aluminum foil. Doing so blocks airflow through the oven and may cause carbon monoxide poisoning. Aluminum foil linings may also trap heat, causing a fire hazard.

It is recommended that this appliance is serviced annually by a qualified service engineer.

DO NOT repair or replace any part of the appliance unless specifically recommended in this User Manual. Always consult a qualified service engineer.

All other servicing should be done only by a qualified technician, this may reduce the risk of personal injury and damage to the range.

NEVER modify or alter the construction of a range by removing levelling legs, panels, wire covers, anti-tip brackets/ screws, or any other part of the product.

DO NOT leave children alone.

Babies, toddlers and young children should not be allowed near the range at any time. They should **NEVER** be allowed to sit or stand on any part of the appliance.

DO NOT allow children to climb or play around the range. The weight of a child on an open door may cause the range to tip, resulting in serious burns or other injury. Teach them not to play with controls or any other part of the range.

NEVER store items of interest to children in the cabinets above a range or on the backguard of a range; children climbing on the range to reach them could be seriously injured.

DO NOT use the oven for storage.

This instruction is based on safety considerations.

Flammable materials should not be stored in an oven, the range storage drawer or near the cooktop burners. This includes paper, plastic and cloth items, such as cookbooks, plasticware and towels, as well as flammable liquids. **DO NOT** store explosives, such as aerosol cans, on or near the appliance.

Flammable materials may explode and result in fire or property damage.

To avoid risk of electrical shock, personal injury, or death, make sure your range has been properly grounded and always disconnect it from main power supply before servicing.

DO NOT touch the cooktop cooking areas.

The marked cooking areas on the cooktop may be hot even if they have been off for some time. Areas near the cooking area may become hot enough to cause burns. During and after use, **DO NOT** touch, or let clothing touch or other flammable materials contact the cooktop or areas near the cooking area until they have had enough time to cool. These areas include the rangetop and rear vent.

DO NOT touch heating elements or interior surfaces of ovens.

Oven heating elements may be hot though they are dark in color. Interior surfaces of an oven may become hot enough to cause burns. During and after use, **DO NOT** touch, or let clothing or other flammable materials touch heating elements or interior surfaces of oven until they have had enough time to cool.

Other range surfaces that may become hot enough to cause burns are the broiler compartment and oven vent at the rear of the range.

Wear suitable clothing

NEVER wear loose-fitting or hanging clothes while using the range. Be careful when reaching for items stored in cabinets over the cooktop. Flammable material could be ignited if brought into contact with a hot surface and may cause severe burns.

Use only dry potholders or oven gloves

Moist or damp potholders on hot surfaces may result in burns from steam. **NEVER** let a potholder touch hot heating elements.

DO NOT use a towel or other bulky cloth in place of a glove. They might catch fire if they touch a hot surface.

Use dry oven gloves when applicable – using damp gloves might result in steam burns when you touch a hot surface. **NEVER** operate the range with wet hands.

Oven care

Use care when opening the door. Let hot air and steam escape before removing or replacing food (Fig. 1.1).

NEVER heat unopened food containers. Pressure build up may make container burst and cause injury.

Keep oven vent ducts unobstructed.

ALWAYS place oven racks in their desired location while the oven is cool. If a rack must be moved while the oven is hot, DO NOT let the potholders contact the heating element in the oven.

Induction care

Important information for pacemaker and implanted insulin pump users: The functions of this cooktop comply with the applicable standards on electromagnetic interference. If you are fitted with a pacemaker or implanted insulin pump and are concerned please consult your doctor for medical advice.

To fully utilize the power of your induction stove top and to ensure longevity of performance, we recommend the use of AGA approved Induction Pots and Pans. If you decide to purchase an alternative set of pans for use on your induction range, we would strongly recommend that composite aluminum pans with steel inserts, example shown **Fig. 1.2**, are avoided. This type of pan construction can significantly reduce the lifetime and performance of your induction cook top.

Only certain types of glass, glass-ceramic, earthenware or other glazed containers are suitable for hotplate cooking; others may break because of the sudden change in temperature. NEVER cook directly on the cooktop surface (Fig. 1.3).

DO NOT cook on a broken cooktop. If the cooktop should break, cleaning solutions and spillovers may penetrate the broken cooktop and cause a risk of electric shock. Contact a qualified technician immediately (Fig. 1.4).

Should a crack appear in the surface, disconnect the range immediately from the supply and arrange for its repair.

NEVER leave surface units unattended at high heat settings - boilover may cause residue, that may ignite.

ALWAYS LIFT pans off the cooktop. Sliding pans may cause marks and scratches (Fig. 1.5).

Take care NOT TO PLACE HOT LIDS onto the cooktop surface (Fig. 1.6). Lids that have been used to cover a hot pan can "stick" or create a "vacuum" effect to the glass top. Should this occur, DO NOT attempt to lift the lid off the glass surface, this may damage the glass. Instead slide the lid to the edge of the cooktop and remove, taking care not to scratch the cooktop surface. Alternatively wait until the lid has cooled to room temperature, the vacuum has been released, then remove the lid by lifting it from the cooktop.

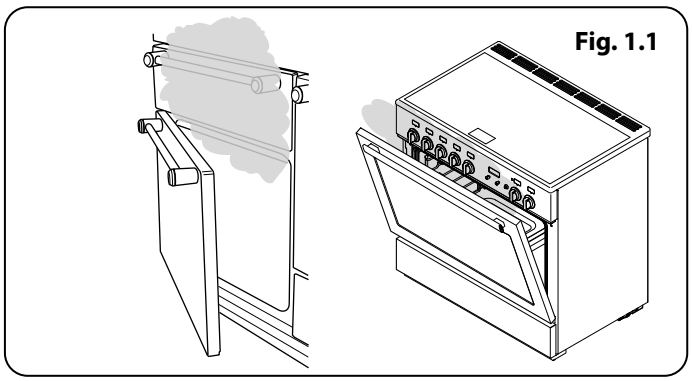
Fig. 1.1

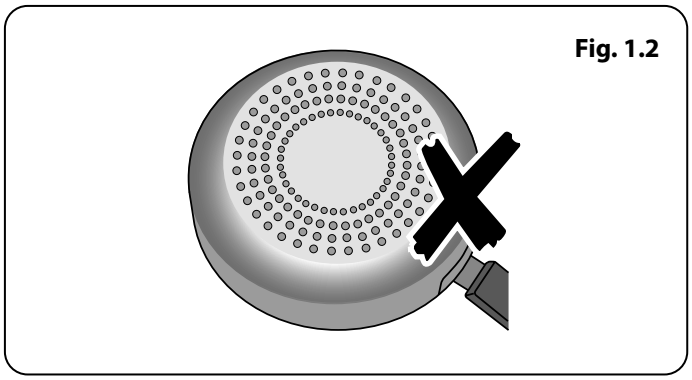
Fig. 1.2

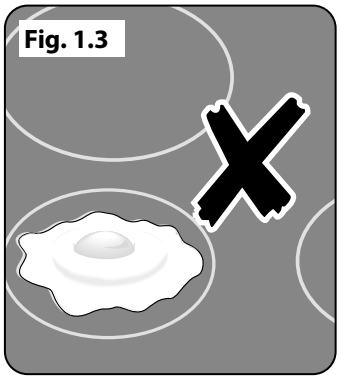
Fig. 1.3

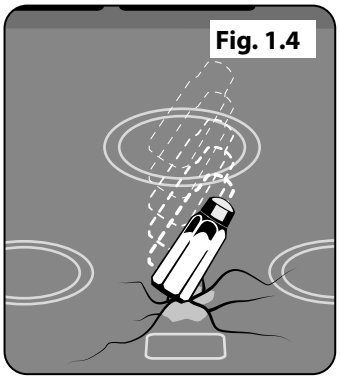
Fig. 1.4

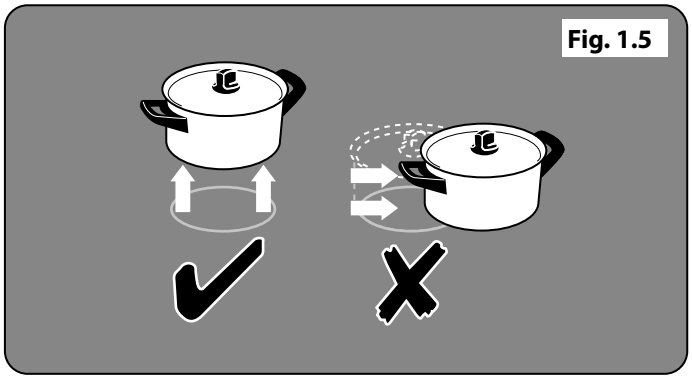
Fig. 1.5

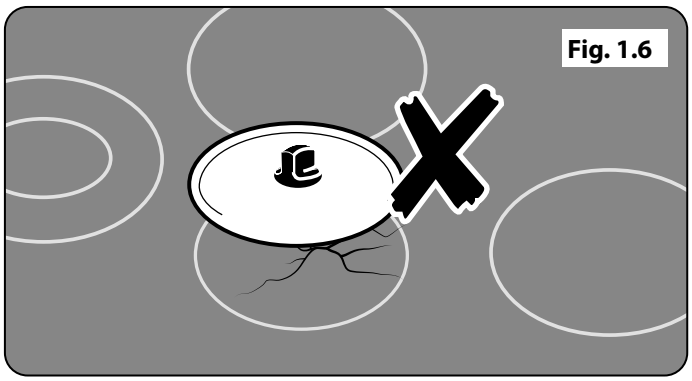
Fig. 1.6

Pan Performance Check

Method:

Use a 1.85 Kw zone (centre zone on Rangemaster models, refer to manual for ratings of each zone).

- Fill an unlidded pan with 1/2 litre of room temperature water (the diameter of pan should not be greater than the outer circle of the zone).
- Operate the zone at power level 9.
- The water should boil within 3 ½ minutes.

Boiling times outside this duration would suggest that the pan construction is not ideal to provide best performance and can result in premature component failure.

Use the right size pan

This appliance is equipped with cooktop zones of different sizes. Use utensils with flat bottoms. **DO NOT** use unstable pans and position the handles away from the edge of the cooktop.

Proper relationship of utensil to burner will improve efficiency.

⚠ **NEVER leave cooktop zones unattended at high settings. Pans boiling over can cause smoking and greasy spills may catch on fire.**

⚠ **Protective Liners – DO NOT use aluminium foil to line cooktop bowls or oven bottoms. Foil liners may result in a risk of electric shock, or fire and will damage the enamel finish. NEVER allow aluminium foil to contact the heating elements.**

⚠ **DO NOT use hotplate protectors, foil or hotplate covers of any description. These may affect the safe use of your hotplate burners and are potentially hazardous to health.**

⚠ **Only certain types stainless steel, enamelled steel pans or cast iron pans with enamelled bases are suitable for induction cooktop cooking.**

⚠ **Utensil handles should be turned inward and not over adjacent cooktop zones. If handles are left over adjacent zones they will get hot and may burn.**

General safety instructions

⚠ **This appliance is provided with rollers to facilitate movement during installation. The range should not be moved after installation.**

This appliance must be installed by a competent person in accordance with the installation instructions. The installation must comply with the relevant regulations and also the local electricity supply company requirements.

This appliance is designed for domestic cooking only. Use for any other purpose could invalidate any warranty or liability claim.

The range should be serviced by a qualified service engineer and only approved parts used. Have the installer show you the location of the range circuit breaker. Mark it for easy reference. Always allow the range to cool and then switch off at the circuit breaker before cleaning or carrying out any maintenance work, unless specified otherwise in this guide.

⚠ **All parts of the range become hot with use and will retain heat even after you have stopped cooking.**

⚠ **Take care when touching range, to minimize the possibility of burns, always be certain that the controls are in the OFF position and that it is cool before attempting to clean the range.**

⚠ **Clean with caution. If a wet sponge or cloth is used to wipe spills on a hot surface, be careful to avoid steam burns. Some cleaners can produce noxious fumes if applied to a hot surface.**

Clean only parts listed in this guide.

In the interests of hygiene and safety the range should be kept clean at all times as a build up in fats and other food stuff could result in a fire.

Always keep combustible wall coverings or curtains etc. a safe distance away from your range.

⚠ **DO NOT spray aerosols in the vicinity of the range while it is in use.**

DO NOT store or use combustible materials, or flammable liquids in the vicinity of this appliance.

Take great care when heating fats and oils, as they will ignite if they get too hot.

Use a deep fat thermometer whenever possible to prevent overheating fat beyond the smoking point.

NEVER leave a deep fry pan unattended. Always heat fat slowly, and watch as it heats. Deep fry pans should be only a maximum of one third full of fat. Filling the pan too full of fat can cause spill over when food is added. If you use a combination of oils or fats in frying, stir them together before heating, or as the fats melt.

Foods for frying should be as dry as possible. Frost on frozen foods or moisture on fresh foods can cause hot fat to bubble up and over the sides of the pan. Carefully watch for spills or overheating of foods when frying at high or medium high temperatures. **NEVER** try to move a pan of hot fat, especially a deep fry pan. Wait until the fat is cool.

When an oven is on, **DO NOT** use the top of the flue (the round holes along the back of the range) for warming plates, dishes, drying dish towels or softening butter.

When using an electrical appliance near the cooktop, be sure that the cord of the appliance does not come into contact with the cooktop.

Take care that no water seeps into the appliance.

Make sure that your kitchen is well ventilated at all times. Use extractor fans or hoods when installed.

The range is designed for cooking foods only and must not be used for any other purpose.

The oven should **NOT** be used for heating the kitchen, not only does this waste fuel but the control knobs may become overheated.

When the oven is on **DO NOT** leave the oven door open for longer than necessary.

The specification of this range should not be altered.

This appliance is heavy, take care when moving it.

When the range is not in use ensure that the control knobs are in the off position.

2. Range overview

Fig. 2.1

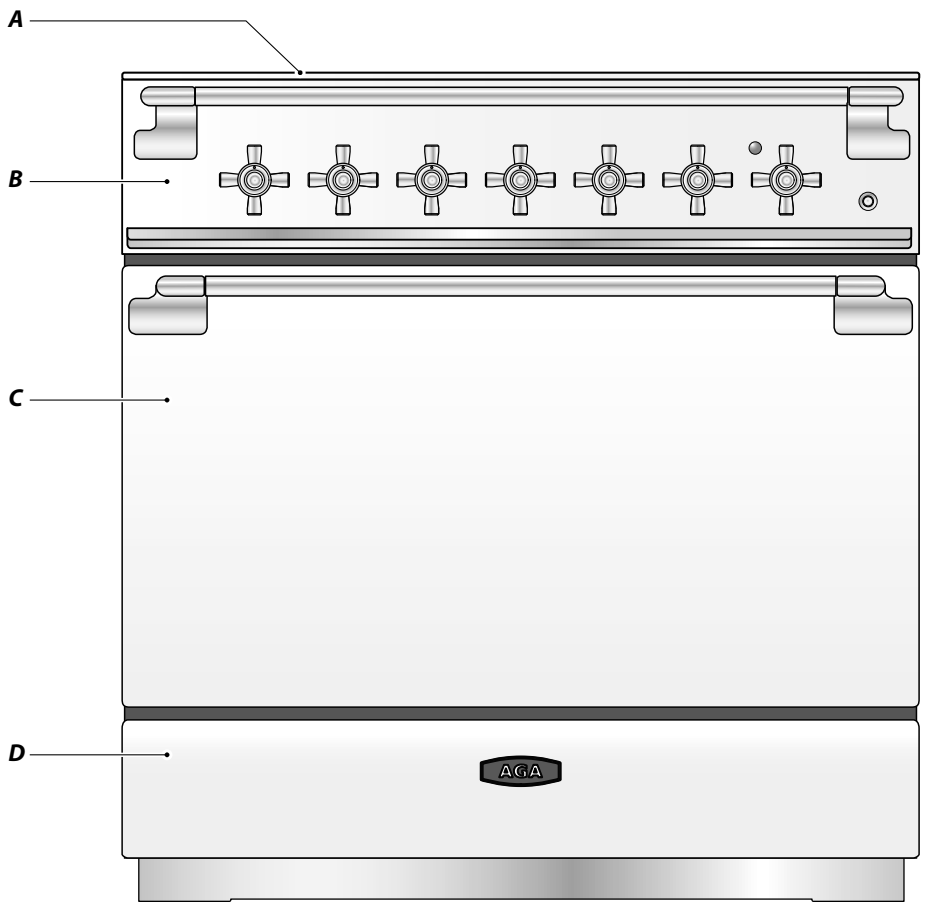

Fig. 2.2

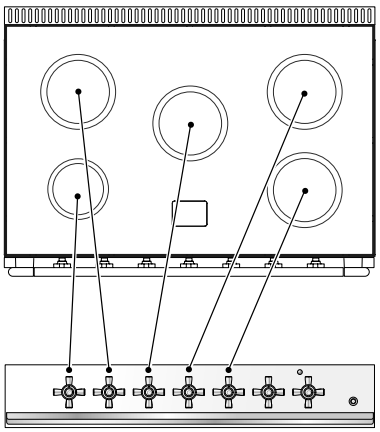

Fig. 2.3

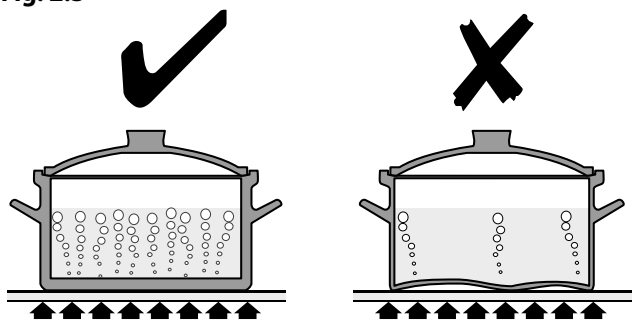

The 36" induction range (**Fig. 2.1**) has the following features:

A. 5 induction cooking zones

B. A control panel

C. Main multi-function oven

D. Storage drawer

Cooktop

Use only pans that are suitable for induction cooktops. We recommend stainless steel, enamelled steel pans or cast iron pans with enamelled bases. Note that some stainless steel pans are not suitable for use with an induction cooktop so please check carefully before purchasing any cookware.

The controls for the induction cooktop are shown in **Fig. 2.2**.

Pans made of copper, aluminium or ceramic are not suitable for use on an induction cooktop. The kind of pan you use and the quantity of food affects the setting required. Higher settings are required for larger quantities of food.

Pots and pans should have thick, smooth, flat bottoms (**Fig. 2.3**). This allows the maximum heat transfer from the cooktop to the pan, making cooking quick and energy efficient. Never use a round-bottomed wok, even with a stand.

The very best pans have bases that are very slightly curved up when cold (**Fig. 2.4**). If you hold a ruler across the bottom you will see a small gap in the middle. When they heat up the metal expands and lies flat on the cooking surface.

Make sure that the base of the pan is clean and dry to prevent any residue burning onto the cooktop panel. This also helps prevent scratches and deposits.

Always use pans that are the same size as (or slightly larger than) the areas marked on the cooktop. Using a lid will help the contents boil more quickly.

Always take care before touching the surface, even when the cooktop is turned off. It may be hotter than you think!

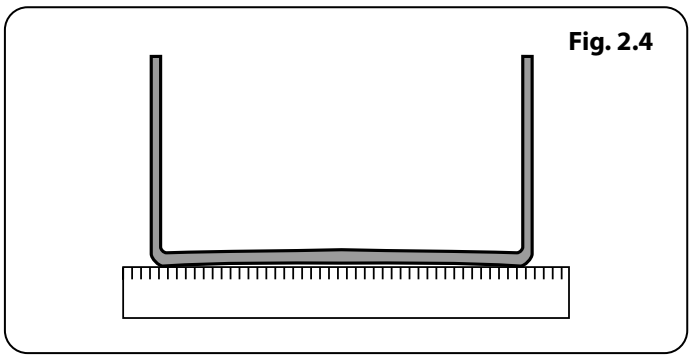

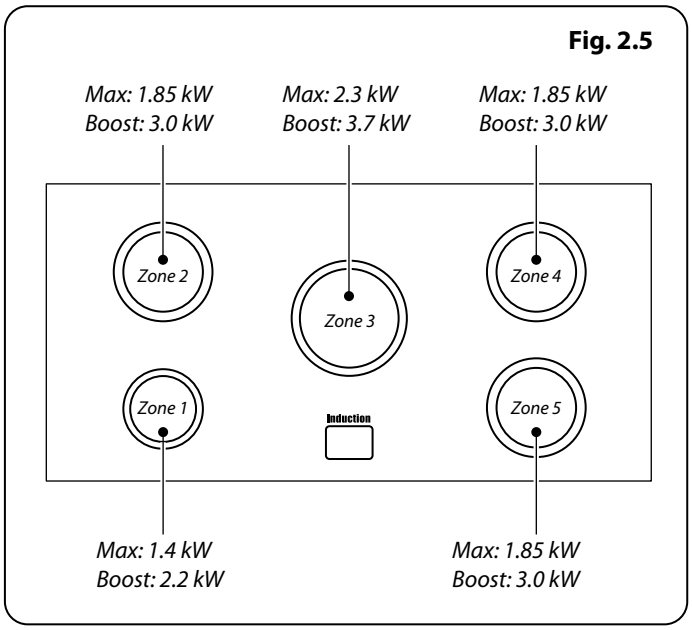

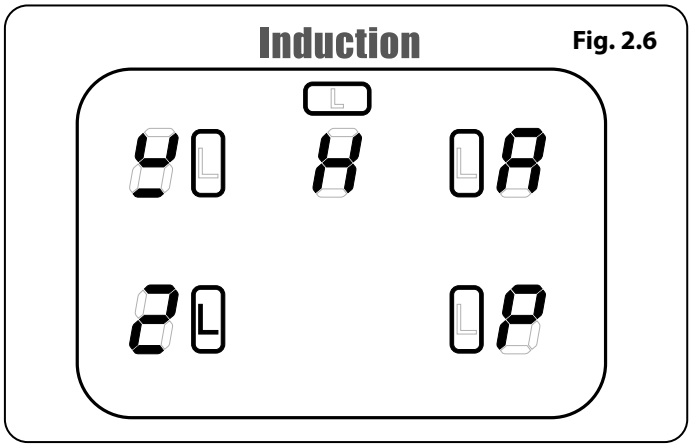

Cooktop control indications & warnings

The induction cooktop comprises of five cooking zones containing induction elements with different ratings and diameters (**Fig. 2.5**) each with a pan detector and residual heat indicator, and a cooktop control display.

The cooktop control display (**Fig. 2.6**) informs you of the following induction cooktop functions:

Pan Detector

H Residual Heat Indicator

A Automatic Heat-up

L Child Lock

L1/L2/L3 Low Temperature/Simmer Setting

P Power Boost Setting

Pan detector,

IMPORTANT: After use, switch off the cooktop element by its control and DO NOT RELY on the pan detector.

If a cooking area is switched on and there is no pan in place or if the pan is too small for the cooking area, then no heat will be generated. The symbol [ ]will appear on the cooktop control display; this is the "pan-missing symbol". Place a pan of the correct size on the cooking area and the [ ] will disappear and cooking can begin. After 10 minutes without detecting a pan the cooking zone will switch off automatically.

Table 2.1 shows the minimum pan sizes recommended for each cooking zone.

Note: Using pans with a base diameter smaller than those recommended will result in a power reduction.

Cooking zone	Minimum Pan Diameter (Pan base) inches (mm)
Front left	4 3/4" (120)
Rear left	5 1/2" (140)
Centre	8 1/4" (160)
Rear right	5 1/2" (140)
Front right	5 1/2" (140)

Table 2.1

Power level	Auomatic Heat-up Time at 100% (min:sec)
1	0:48
2	2:24
3	3:50
4	5:12
5	6:48
6	2:00
7	2:48
8	3:36
9	

Table 2.2

Fig. 2.7

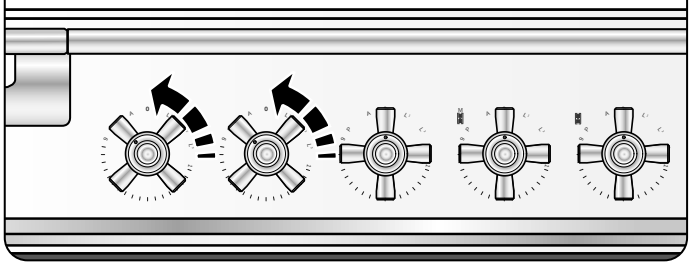

Fig. 2.8

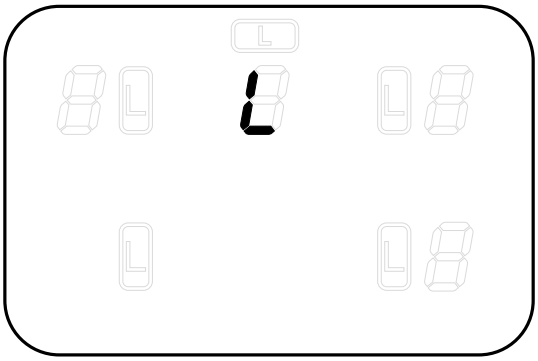

Residual heat indicator, H

After use, a cooking zone will remain hot for a while as heat dissipates. When a cooking zone is switched off the residual heat indicator symbol [H], will appear in the display. This shows that the cooking zone temperature is above 140 °F (60 °C) and may still cause burns. Once the temperature has dropped to below 140 °F (60 °C) the [H] will go out.

Automatic heat-up, A

This function is available on all of the cooking zones. It allows rapid heating to bring the selected cooking zone up to temperature. The zone will maintain 100 % power (level 9) for the specified time and then automatically reduce power to the preset level. The function is selected by turning the control knob to the 'A' position. This can be selected by turning the control knob momentarily counter-clockwise from the zero position until the symbol [A] is shown on the cooktop control display.

Once the [A] is displayed, turn the control knob to the level of your choice (1 to 9). The pan will heat up at 100% power for a specified time before the power is reduced to the level selected.

When the Automatic Heat-up function is activated, the cooktop control display will flash alternately between the [A] setting and the chosen power level.

Once the Automatic Heat-up time has ended the cooktop display will stop flashing and will show the chosen power level.

The Automatic Heat-up function can be stopped by either turning the control knob back to the "0" power setting or turning the control knob to the "9" power setting.

For your guidance **Table 2.2** shows the time available at 100% power depending on the power level selected in the Automatic Heat-up mode.

Child lock, L

To prevent the unwanted use by children, the cooktop can be locked.

⚠ **IMPORTANT: This can only be activated when all the cooking zones are switched off.**

To lock the cooktop, simultaneously turn the two left-hand cooktop controls counter-clockwise **(Fig. 2.7)** and hold until the L symbol appears in the centre of the cooktop control display **(Fig. 2.8)**.

NOTE: [A] will flash when locking the cooktop – this is normal.

Locking the cooktop will NOT affect the oven; it can still be used.

To unlock the cooktop, simultaneously turn the two left-hand controls counter-clockwise and hold until the L symbol disappears from the centre of the cooktop control display.

Low temperature/simmer setting, L1/L2/L3

This function should only be used when heating from cold.

Each cooking area is equipped with 3 low temperature settings:

L1 will maintain a temperature of about 108 °F (42 °C) – ideal for gently melting butter or chocolate.

L2 will maintain a temperature of about 158 °F (70 °C) – ideal for keeping food warm once it is cooked.

L3 will maintain a temperature of about 201.2 °F (94 °C) – ideal for simmering (bring the pan to the boil and then select L3 to keep soups, sauces, stews, etc at an optimal simmer).

The maximum time this setting can be used is 2 hours, after which the cooktop will switch off automatically. If required, you can immediately restart the Low Temperature function by reactivating L1, L2 or L3. To increase the heat, just turn the control knob to the required level.

The maximum times for all other power levels are shown in **Table 2.3**.

Power boost setting, P

All of the induction cooking zones have Power Boost available, activated by turning the control knob clockwise until [P] is shown on the cooktop control display.

Power Boost allows additional power to be made available for each of the cooking zones. This is useful to bring a large pan of water to the boil quickly.

The Power Boost function operates for a maximum of 10 minutes on each zone, after which the power is automatically reduced to setting 9.

When using the Power Boost function, the cooking zones are linked.

Fig. 2.9 shows the cooktop layout. Zones A and B are linked together as are zones D and E.

This means that when using zone A on Power Boost and then switching zone B to Power Boost, the power to zone A will reduce slightly. The last zone switched to Power Boost always takes priority. Zones D and E work in the same way. Zone C is not shared.

This is a built in safety device.

Deactivate the Power Boost function by turning the control knob to a lower setting.

Power Level	Maximum Operating Time
L1, L2 and L3	2 hours
1	6 hours
2	6 hours
3	5 hours
4	5 hours
5	4 hours
6	1.5 hours
7	1.5 hours
8	1.5 hours
9	1.5 hours
Power Boost	10 minutes

Table 2.3

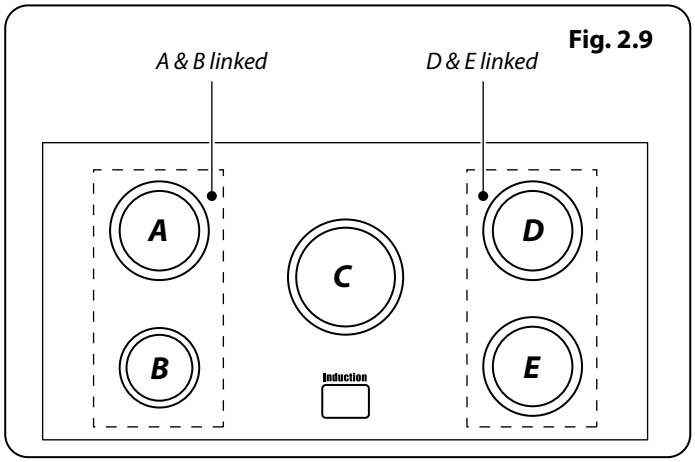

Fig. 2.9

Fig. 2.10

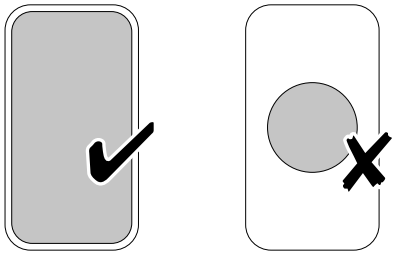

Fig. 2.11

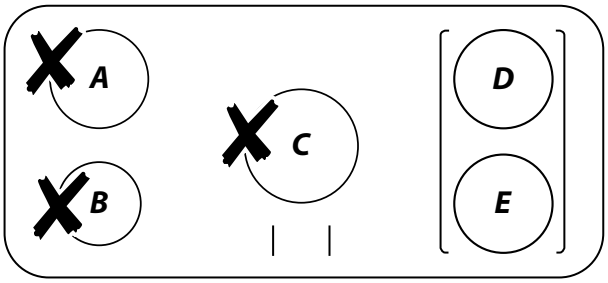

Fig. 2.12

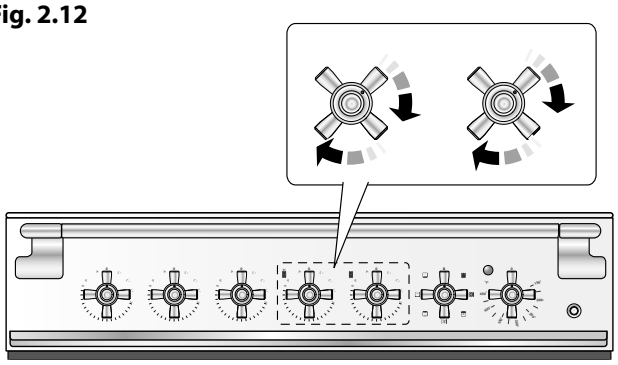

Fig. 2.13

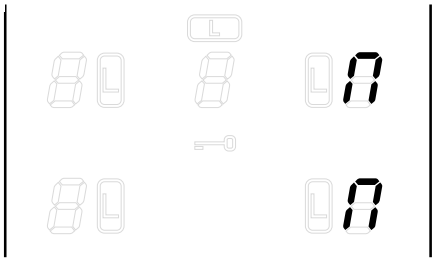

Fig. 2.14

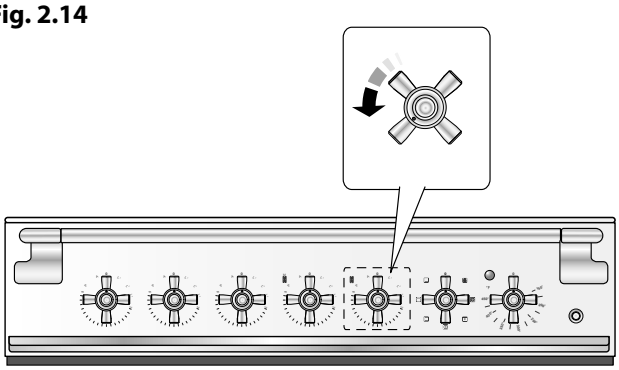

The Bridging-Zone Function

Zones D and E can be bridged, creating an area, ideal for use with an induction griddle (not supplied).

Note: The griddle should comprise of an induction friendly, flat bottom, large enough to cover zones D and E of the hotplate heating area (**Fig. 2.10**).

DO NOT use zones A, B or C to heat the griddle (**Fig. 2.11**).

To activate the bridging-zone function, simultaneously turn the two right-hand controls completely clockwise (**Fig. 2.12**) and hold until the [⊓] symbols appear in the centre of the cooktop control display (**Fig. 2.13**). The temperature can then be adjusted using the right-hand knob (**Fig. 2.14**).

Turn both knobs counter-clockwise to cancel the dualzone function and return to normal operation.

⚠ **DO NOT turn the two right-hand knobs individually to heat the griddle. This can cause excessive temperatures and damage the coating on the griddle.**

Overheat function

This function identifies when the temperature of the pan rises rapidly and works to maintain a safe level of pan temperature. It should not interfere with normal cooking.

Cookware with bases that become distorted (**Fig. 2.3**) when heated may interfere with the operation of the Overheat Function. This may result in damage to your cookware or Induction Glass Cooktop.

⚠ **Please remember not to leave the cooktop unattended. Care should be taken to not allow your cookware to boil dry. Damage to your cookware and Induction Glass Cooktop may result.**

Please read and follow the manufacturers' instructions carefully before using cookware on your induction cooktop.

The Multifunction Oven

IMPORTANT: Before using the oven for the first time, to dispel manufacturing odors, turn the oven to 392°F (200°C) in fan assisted mode and run for one hour. To clear the smell make sure the room is well ventilated to the outside air, by opening windows or turning on your ventilation hood.

DO NOT drop or rest objects on the door glass. Although the glass is very strong, a sharp blow or a sharp falling object might cause the glass surface to crack or break.

During use the appliance becomes hot. Care should be taken to avoid touching the heating elements inside the oven.

The oven is a multi-function oven (**Fig. 2.15**). In addition to convection elements around the fans, it is fitted with extra heating elements, in the top of the oven and under the oven base. Take care to avoid touching the top elements when placing or removing items from the oven.

DO NOT place aluminum foil on bottom of oven cavity. This will cause the oven bottom to overheat and void warranty.

The multifunction oven has 3 main cooking functions:

1. **Convection**,
2. **Fan assisted**
3. **Conventional cooking**.

These functions should be used to complete most of your cooking.

The **browning element** and **warming** can be used in the latter part of the cooking process to fine-tune the results to your particular requirements.

Use **convection broiling** for all your broiling needs and **thaw and serve** to safely thaw small items of frozen food.

Table 2.4 gives a summary of the multi-function modes.

The multi-function oven has many varied uses. We suggest you keep a careful eye on your cooking until you are familiar with each function. Remember, not all functions will be suitable for all food types.

Please remember that all ranges vary – temperatures in your new ovens may differ to those in your previous range.

Broiler Elements

There are two broiler elements situated behind heat shields in the top of the oven cavity (**Fig. 2.16**). Please note their positions when placing food on the oven shelf for broiling.

Fig. 2.15

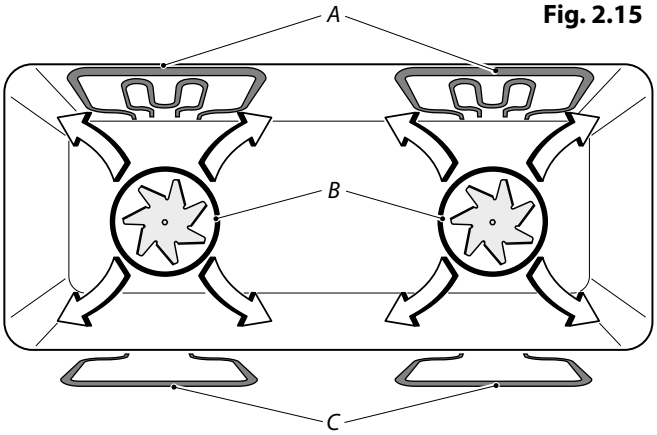

A – Broiler elements, B – Convection element, C – Base heat elements

Function	Use
Thaw and serve	To thaw small items in the oven without heat
True convection oven	A full cooking function, even heat throughout, great for baking
Convection broilering	Broilering meat and fish with the door closed
Fan assisted	A full cooking function good for roasting and baking
Conventional oven	A full cooking function for roasting and baking in the lower half of the oven
Browning element	To brown and crisp cheese topped dishes
Warming	To crisp up the bases of quiche, pizza or pastry

Table 2.4

Fig. 2.16

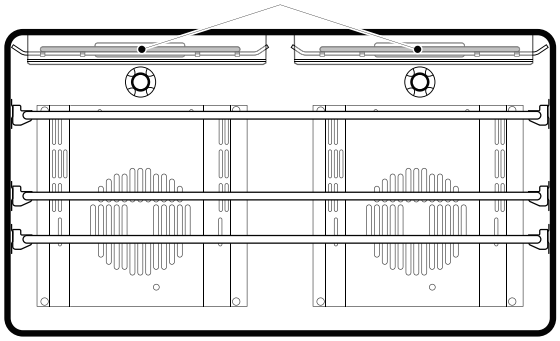

Fig. 2.17

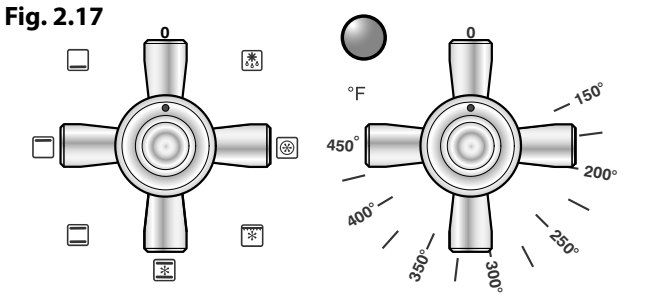

Function selector

Temperature selector

Fig. 2.18

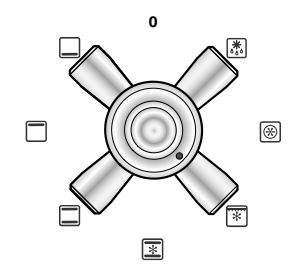

Fig. 2.19

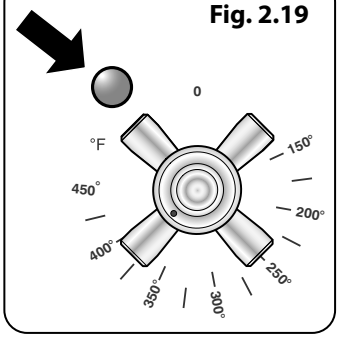

Fig. 2.20

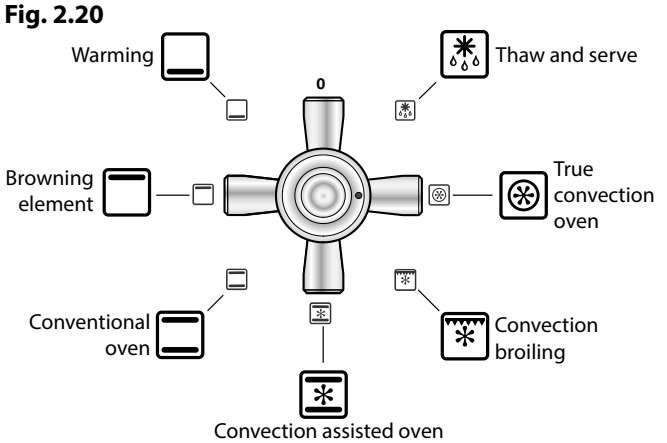

Fig. 2.21

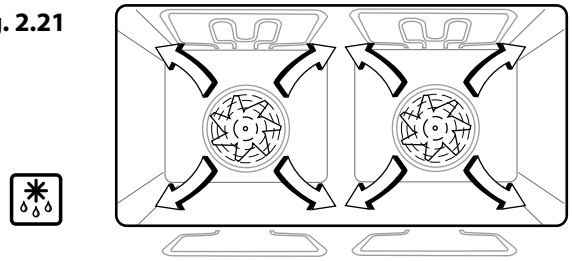

Fig. 2.22

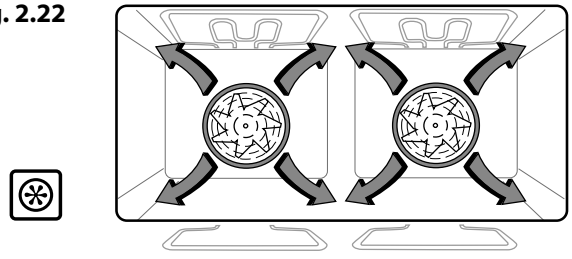

Operating the oven

The multi-function oven has two controls: a function selector and a temperature setting knob (**Fig. 2.17**).

Turn the function selector control to a cooking function. **Fig. 2.18** shows the control set for conventional oven cooking.

Turn the oven temperature knob to the temperature you need. The oven heating light will glow until the oven has reached the temperature you selected. It will then cycle on and off during cooking as the oven maintains the selected temperature (**Fig. 2.19**).

Multi-function oven modes (Fig. 2.20)

Thaw and serve

This function operates the fan(s) to circulate cold air only (**Fig. 2.21**). Make sure the temperature control is at 0° and that no heat is applied. This enables small items such as desserts, cream cakes and pieces of meat, fish and poultry to be defrosted.

Thawing in this way speeds up the process and protects the food from contamination. Pieces of meat, fish and poultry should be placed on a rack, over a tray to catch any drips. Be sure to wash the rack and tray after thawing.

NOTE: Thaw with the oven door closed and the oven light OFF.

Large items, such as whole chickens and meat roasts should not be thawed in this way. We recommend this be carried out in a refrigerator.

Thawing should not be carried out in a warm oven.

Ensure that dairy foods, meat and poultry are completely thawed before cooking.

True convection oven

This function operates the fans and the heating element around them (**Fig. 2.22**). An even heat is produced throughout the oven, allowing you to cook large amounts quickly.

Convection oven cooking is particularly suitable for multi-rack cooking and is a good 'all-round' function. It may be necessary to reduce the temperature by approximately 20°F (10°C) for recipes previously cooked in a conventional oven.

If you wish to preheat the oven, wait until the indicator light has gone out before inserting the food.

To cook on 3 levels, use racks 1, 3 and 5. Use your broiler pan and rack as an extra level.

Convection broiling

This function operates the fan while the top element is on. It produces a more even, less fierce heat than a conventional broiler (**Fig. 2.23**). For best results, place the food to be grilled on the grid in the pan provided. Thick pieces of meat or fish are ideal for cooking in this way as the circulated air reduces the fierceness of the heat from the broiler. The oven door should be kept closed while cooking is

in progress, so saving energy. You will also find that the food needs to be watched and turned less than for normal broiling.

Rack levels 5 and 6 should be used depending on the size of the food being cooked. For best results we recommend that the grill pan is not located on the uppermost shelf.

Convection assisted oven

This function operates the fans, circulating air heated by the elements at the top and the base of the oven (**Fig. 2.24**). The combination of fan and conventional cooking (top and base heat) makes this function ideal for cooking large items that need thorough cooking, such as a large meat roast. It is also possible to bake on two racks at one time using racks 2 & 3, although they will need to be changed over during the cooking time, as the heat at the top of the oven is greater than at the base when using this function.

This is a fast, intensive form of cooking; keep an eye on the food cooking until you have become accustomed to this function.

Conventional oven *(Top and Base Heat)*

This function combines the heat from the top and base elements (**Fig. 2.25**). It is particularly suitable for roasting and baking pastry, cakes and biscuits. Food cooked on the top rack will brown and crisp faster than on the lower rack, because the heat is greater at the top of the oven than at the base, as in 'fan assisted oven' function. Similar items being cooked will need to be changed around for even cooking (use racks 2 & 3). This also means that foods requiring different temperatures can be cooked together, using the cooler zone in the lower half of the oven and hotter area to the top.

Browning element

This function uses the element in the top of the oven only (**Fig. 2.26**). It is a useful function for the browning or finishing of pasta dishes, vegetables in sauce and lasagna, the item to be browned being already hot before switching to the top element.

Warming

This function uses the base element only (**Fig. 2.27**). It will crisp up your pizza or quiche base or finish off cooking the base of a pastry case on a lower rack. It is also a gentle heat, good for slow cooking of casseroles in the middle of the oven or for plate warming.

The Browning and Warming functions are useful additions to your oven, giving you flexibility to finish off items to perfection. With use, you will soon realize how these functions can combine to extend your cooking skills.

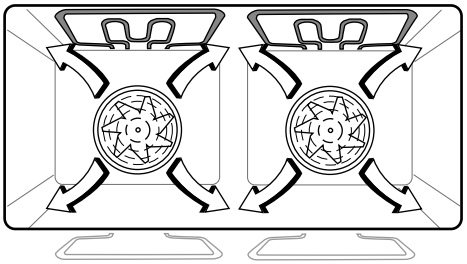

Fig. 2.23

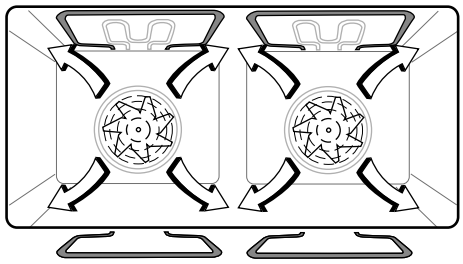

Fig. 2.24

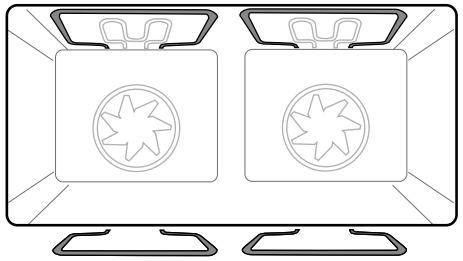

Fig. 2.25

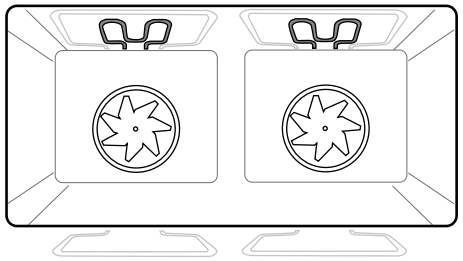

Fig. 2.26

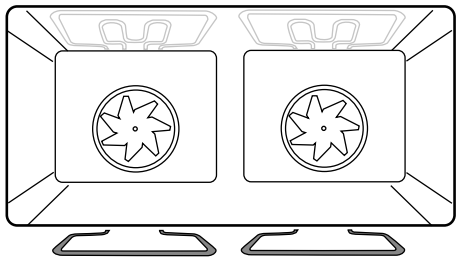

Fig. 2.27

Fig. 2.28

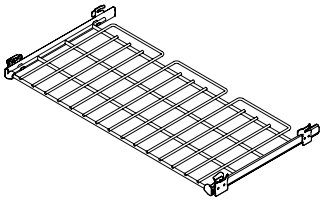

Fig. 2.29

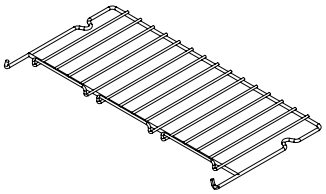

Fig. 2.30

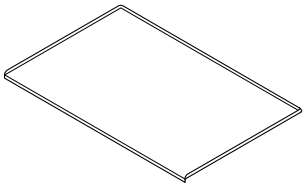

Fig. 2.31

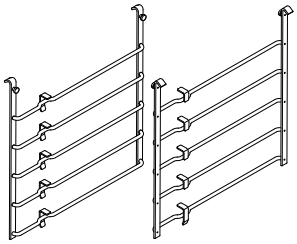

Fig. 2.32

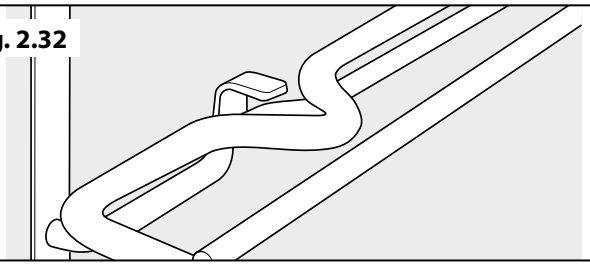

Fig. 2.33

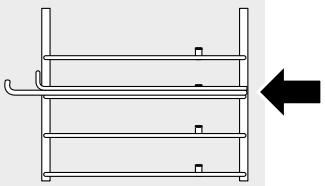

Fig. 2.34

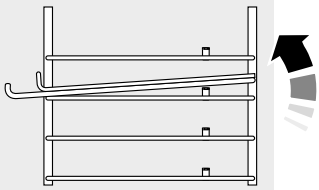

Fig. 2.35

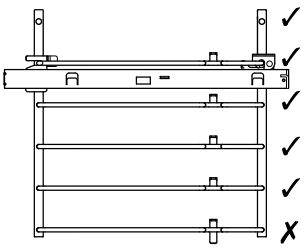

Fig. 2.36

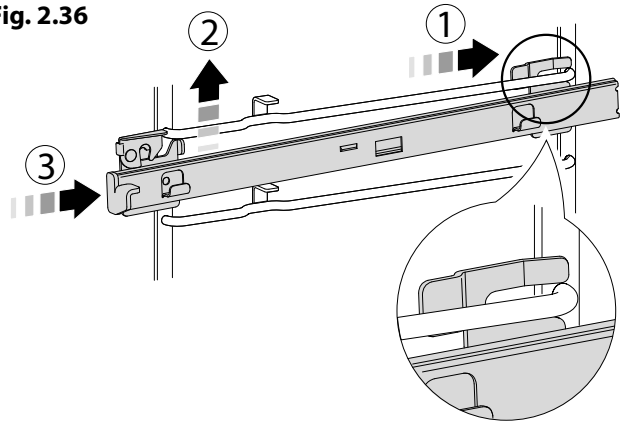

Accessories

Oven racks

The oven is supplied with:

- 2 telescopic racks with runners **(Fig. 2.28)**
- 1 flat rack (**Fig. 2.29**)
- 1 pastry tray **(Fig. 2.30)**
- 2 sets of ladder rack supports **(Fig. 2.31)**

The oven racks are retained when pulled forward but can be easily removed and refitted.

Racks

To remove and refit the rack

The rack has a small kink on either side (**Fig. 2.32**). To remove the rack, line these up with the stops in the rack support (**Fig. 2.33**). Lift the rack upwards so that it will pass over the rack stop and then pull it forwards (**Fig. 2.34**).

Refit in the reverse order, making sure to push it fully back.

To fit the telescopic rack runners

Please note that it is not possible to fit telescopic runners to the bottom rack support location (**Fig. 2.35**).

With the runner arm in the closed position locate the opening of the upper rear slot on the side support (**Fig. 2.36**). **DO NOT** locate any further than the opening at this point. Although not shown in (**Fig. 2.36**), fitting is the same for the upper stud type supports.

Lift the front of the runner arm to locate the front slot against the side support (**Fig. 2.36**).

Push the runner arm towards the rear of the oven. The catch at the front will lift and drop to secure the runner arm in place (**Fig. 2.36**).

To fit a rack to the telescopic rack runners

Slide the telescopic runners forward until they stop. Holding the rack above the runners, tilt the front downward and locate into the front of the runners. Lay the rack flat. Press on the rear of the rack to secure in place.

To remove a rack from the Telescopic rack runners

Slide the rack out on the runners. While holding one of the runners securely, carefully lift the rear of the rack upwards: the rack will spring clear of the central restraining tab. Repeat for the opposite side of the rack.

Note: To aid the removal of the rack, you can insert a suitable flat tool through the opening in the side of the runners and lever the rack clear (**Fig. 2.37**).

Tilt the front of the rack downwards and then lift clear of the runners (**Fig. 2.38**).

To remove the telescopic rack runners

Firstly, remove the rack as in the 'To Remove a Rack from the Telescopic Rack Runners' section.

Place a finger on the underside of the telescopic runner and lift.

Open the catch on top of the runner and pull the runner forward and down to remove.

To remove and refit the ladder rack supports

Lift the ladder support hooks out of the two locating holes in the oven side (or divider) before lifting the support clear of the bottom ladder restraint.

Refit by inserting the bottom of the ladder into the restraint before fitting the hooks through the locating holes.

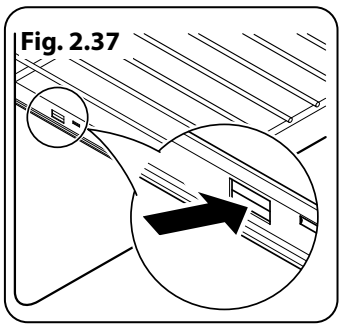

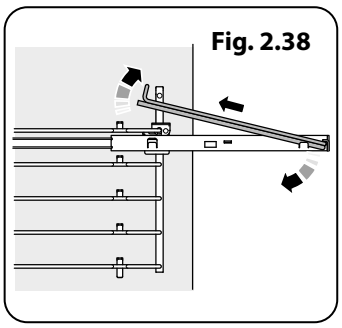

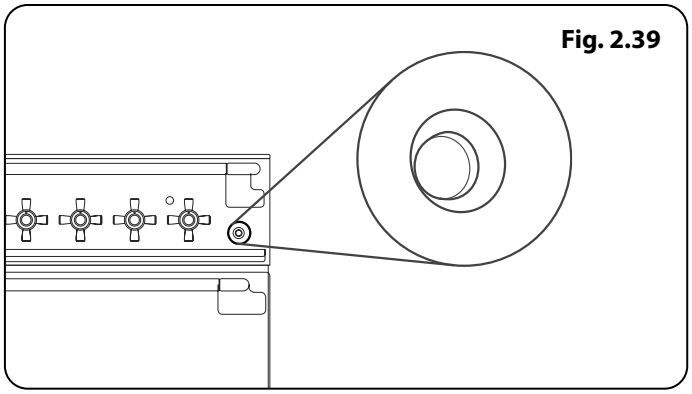

Oven light

Press the appropriate button to turn on the oven lights (**Fig. 2.39**).

If one of the oven lights fail, turn off the range circuit breaker before you change the bulb. See the 'Troubleshooting' section for details on how to change an oven light bulb.

Storage

The bottom drawer is for storing oven trays and other cooking utensils. The drawer can be removed completely for cleaning, etc.

⚠ **It can get very warm, so DO NOT store anything in it, which may melt or catch fire.**

⚠ **Never store flammable materials in the drawer. This includes paper, plastic and cloth items, such as cookbooks, plastic ware and towels, as well as flammable liquids.**

⚠ **DO NOT store explosives, such as aerosol cans, on or near the appliance.**

⚠ **Flammable materials may explode and result in fire or property damage.**

3. Cooking tips

Fig. 3.1

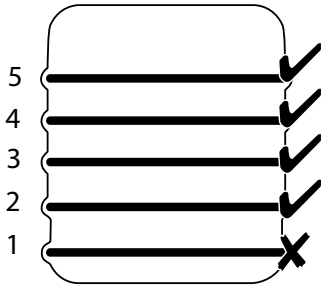

Cooking with a multi-function oven

REMEMBER: not all modes are suitable for all food types. The oven cooking times given are intended as a guide only.

General oven tips

The wire racks should always be pushed firmly to the back of the oven.

Baking trays with food cooking on them should be placed level with the front edge of the oven's wire racks. Other containers should be placed centrally. Keep all trays and containers away from the back of the oven as overbrowning of the food may occur.

When the oven is on, DO NOT leave the door open for longer than necessary, otherwise the knobs may get very hot.

- The telescopic racks with runners can be utilized on levels 2, 3, 4 and 5. It is not possible to utilize the rack on level 1 (**Fig. 3.1**).
- Always leave a 'finger's width' between dishes on the same rack. This allows the heat to circulate freely around them.
- To reduce fat splashing when you add vegetables to hot fat around a roast, dry them thoroughly or brush lightly with cooking oil.
- Where dishes may boil and spill over during cooking, place them on a baking tray.
- If you want to brown the base of a pastry dish, preheat the baking tray for 15 minutes before placing the dish in the center of the tray.

4. Cooking table

The oven control settings and cooking times given in the table below are intended to be used **as a guide only**. Individual tastes may require the temperature to be altered to provide a preferred result.

Food is cooked at lower temperature in a convection oven than in a conventional oven. When using recipes, reduce the convection oven temperature by 50°F (10 °C) and the cooking time by 5-10 minutes. The temperature in the convection oven does not vary with height in the oven so you can use any rack.

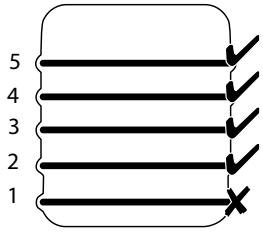

Food	Conventional Oven		Convection Oven	Approximate Cooking Time
	Temperature °F (°C)	Rack position	Temperature °F (°C)	
Meat				
Beef (no bone)	320 (160) 392 (200)	2-3 2-3	302 (150) 374 (190)	30-35 minutes per 1lb +30-35 minutes.* 20-25 minutes per 1lb +20-25 minutes.*
Lamb	320 (160) 392 (200)	2-3 2-3	302 (150) 374 (190)	30-35 minutes per 1lb +30-35 minutes.* 20-25 minutes per 1lb +20-25 minutes.*
Pork	320 (160) 392 (200)	2-3 2-3	302 (150) 374 (190)	35-40 minutes per 1lb +35-40 minutes.* 25-30 minutes per 1lb +25-30 minutes.*
Poultry				
Chicken	320 (160) 392 (200)	2-3 2-3	302 (150) 374 (190)	20-25 minutes per 1lb +20-25 minutes.** 15-20 minutes per 1lb +15-20 minutes.**
Turkey	320 (160) 392 (200)	2-3 2-3	302 (150) 374 (190)	20 minutes per 1lb +20 minutes.** 15 minutes per 1lb +15 minutes.**
Duck	320 (160) 392 (200)	2-3 2-3	302 (150) 374 (190)	25-30 minutes per 1lb.** 20 minutes per 1lb.**
Casserole	302 - 320 (150-160)	2-3	302 (150)	2-4 hours according to recipe.
Fish				
Fillet	374 (190)	3	356 (180)	15-20 minutes.
Whole	374 (190)	3	356 (180)	15-20 minutes per 1lb.
Cake & dessert				
Very rich fruit - Christmas, wedding, etc.	302 (150)	2	284 (140)	45-50 minutes per 1lb of mixture.***
Fruit 7" tin	302 (150)	2	284 (140)	2-2½ hours.***
Fruit 9" tin	320 (160)	2 or 3	302 (150)	Up to 3½ hours.***
Madeira 7" tin	320 (160)	2 or 3	302 (150)	80-90 minutes.***
Cup cakes	347 (175)	2	329 (165)	15-25 minutes
Scones	392 (200)	2	374 (190)	10-15 minutes.****
Deep apple pie	374 (190)	2	356 (180)	45 minutes; interchange after 25 minutes.****
Plate tart	374 (190)	3	356 (180)	45 minutes; interchange after 25 minutes.****
Fruit cake 8" x 3.5" Puff pastry	302 (150) 446 (230)	3 3	284 (140) 428 (220)	1 hour 45 minutes - 2 hours. 15-40 minutes according to size; interchange
				2/3rds through the cooking time.
Angel food cake	347 (175)	3	329 (165)	50-60 minutes
Brownies	374 (190)	2	356 (180)	25-30 minutes; interchange after 15 minutes.

Food	Conventional Oven		Convection Oven	Approximate Cooking Time
	Temperature °F (°C)	Rack position	Temperature °F (°C)	
Muffins	374 (190)	2	356 (180)	25-30 minutes; interchange after 15 minutes.
Cookies	374 (190)	2	356 (180)	10-15 minutes; interchange after 15 minutes.
Pound cakes	374 (190)	3	356 (180)	40-60 minutes.
Bread	428 (220)	2-3	392 (200)	20-30 minutes.

*Thoroughly thaw frozen joints before cooking. Meat may be roasted at 428°F (220°C) and the cooking time adjusted accordingly. For stuffed and rolled meats, add approximately 10 minutes per lb, or cook at 392°F (200°C) for 20 minutes then 320°F (160°C) for the remainder.

** For stuffed poultry, you could cook at 392°F (200°C) for 20 minutes then 320°F (160°C) for remainder. DO NOT forget to include the weight of the stuffing. For fresh or frozen prepacked poultry, follow instructions on the pack. Thoroughly thaw frozen poultry before cooking.

*** Using the conventional oven: when two tier cooking leave at least one runner space between racks. Position the baking tray with the front edge along the front of the oven rack.

**** Up to three tiers can be cooked in a convection oven, at the same time, but make sure to leave at least one runner space between each rack being cooked on.

5. Cleaning your range

Essential information

Before thorough cleaning, turn off the circuit breaker. Allow the range to cool.

After cleaning remember to switch on the circuit breaker before using the range.

NEVER use paint solvents, caustic cleaners, biological powders, bleach, chlorine based bleach cleaners, coarse abrasives or salt.

DO NOT mix different cleaning products – they may react together with hazardous results.

Recommended cleaning materials are shown in **Table 5.1** on page 21.

Cooktop

Daily care

First of all make sure that all heat indicator lights are off and that the cooking surface is cool. Clean the surface with hot soapy water or a non-abrasive cleaner if necessary. As a final step, wipe the cooking surface with a clean, dry paper towel.

Cleaning spills

For spills and boil-overs that occur while cooking, turn the unit off and wipe the area surrounding the hot zone with a clean paper towel. If a spill (other than a sugary substance) is on the hot zone, do not clean until the unit has completely cooled down, and then follow the instructions below ('Cleaning Burned-on Spills').

If you accidentally melt anything on the surface, or if you spill foods with a high sugar content (preserves, tomato sauce, fruit juice, etc.), remove the spill IMMEDIATELY with a razor scraper, while the unit is still hot.

IMPORTANT: Use an oven glove to protect your hand from potential burns.

Scrape the major spill or melted material from the cooking zone and push into a cold area. Then, turn the unit 'OFF' and allow it to cool before cleaning further. After the cooking surface cools down and the heat indicator lights go off, follow the 'Daily Care' procedure outlined above.

Cleaning burned-on spills

Make sure that the heat indicator lights are off and that the cooktop is cool. Remove the excess burned-on substance with a single-edged razor scraper. Hold the scraper at an angle of about 30° to the surface and then scrape off the burned-on matter.

Control panel and oven doors

Avoid using any abrasive cleaners including cream cleaners, on brushed stainless steel surfaces. For best results use liquid detergents.

The control panel and control knobs should only be cleaned with a soft cloth wrung out in clean hot soapy water – but take care that no surplus water seeps into the appliance. Wipe with a clean dampened cloth then polish with a dry cloth. The oven doors should only be cleaned with a soft cloth wrung out in clean hot soapy water.

Oven shelf supports

The shelf supports on the oven sides can be removed for cleaning.

Removing the oven shelf supports

Remove the oven shelves: Pull the top of the shelf support up and away from the oven side and then lift the support away from the locating bracket at the bottom of the oven side (**Fig. 5.1**).

Refitting the oven shelf supports

To refit the side support: Locate the tag at the bottom of the support into the slot in the locating bracket in the oven side (**Fig. 5.2**). Now locate the tops of the side arms in the holes at the top and gently push down.

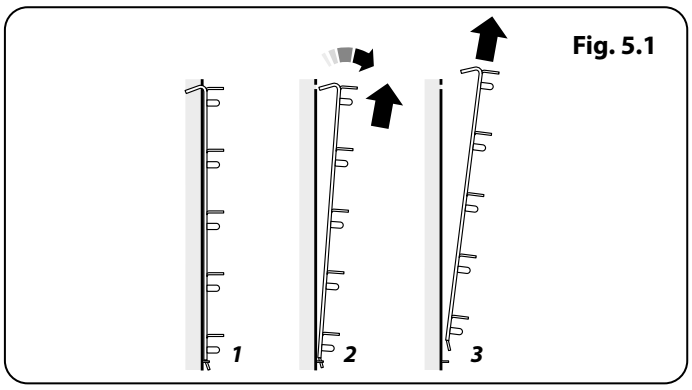

Fig. 5.1

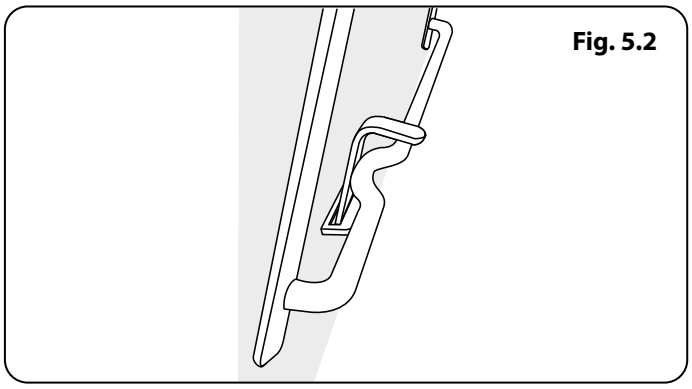
Fig. 5.2

Cleaning table

Cleaners listed (**Table 5.1**) are available from supermarkets or on line.

For enamelled surfaces use a cleaner that is approved for use on vitreous enamel.

Regular cleaning is recommended. For easier cleaning, wipe up any spillages immediately.

Cooktop		
Part	**Finish**	**Recommended Cleaning Method**
Cooktop surface	Toughened glass	Hot soapy water, non-abrasive cleaner if necessary.
Outside of range		
Part	**Finish**	**Recommended Cleaning Method**
Door, door surround and storage drawer exterior	Enamel or paint	Hot soapy water, soft cloth. Any stubborn stains, remove with gentle detergent.
	Stainless steel	Chrome & steel cleaner and buff with a microfiber cloth.
Sides and plinth	Painted surface	Hot soapy water, soft cloth. Enamel cleaner or chrome & steel cleaner respectively, if necessary.
Back Splash/rear grille	Enamel or stainless steel	Hot soapy water, soft cloth. Cream cleaner, with care, if necessary.
Control panel	Paint, enamel or stainless steel	Warm soapy water. Do not use abrasive cleaners on lettering.
Control knobs/handles & trims	Elise knobs are coated brass	Warm soapy water, soft cloth.
Oven door glass/glass lid	Toughened glass	Hot soapy water, non-abrasive cleaner if necessary.
Oven and Broiler		
Part	**Finish**	**Recommended Cleaning Method**
Sides, floor and roof of oven (see below)	Enamel	Any proprietary oven cleaner that is suitable for enameled ovens. **CAUTION:** corrosive/caustic oven cleaners: follow manufacturer's instructions. **DO NOT** allow contact with the oven elements
Oven interior	Porcelain enamel	Branded oven cleaner suitable for enamel surfaces.
Oven shelves, Handyrack, broiler trivet, Handygrill rack	Chrome	An oven interior cleaner that is suitable for chrome. Soap filled pad. Dishwasher.
Broiler pan/meat tin (some models only)	Enamel	Hot soapy water. Soap filled pad. Dishwasher.

Table 5.1

6. Troubleshooting

All servicing and repairs must be carried out by a qualified service engineer.

NOTE: The induction cooktop is able to self-diagnose a number of problems and can show this information to the user via the cooktop control display. Error codes may be displayed if your cooktop has developed a fault.

If your appliance reports an error or is not working, you may be able to correct the fault by consulting the following.

Error code E2 is displayed

The electronic unit is too hot. Please check the installation of the range, making sure that there is sufficient ventilation. In extreme cases, if a cooking utensil has been allowed to boil dry this error code may also be displayed. If in doubt please contact your installer or a qualified repair engineer.

No display operation

Over voltage or loss of supply voltage to the range. If in doubt please contact your installer or a qualified repair engineer.

Error code U400 is displayed

The range has been incorrectly connected. The control will switch off after approximately 1 second and the error code will be permanently displayed.

Consult your installer or a qualified repair engineer.

Error code Er followed by a number is displayed

The appliance has developed an internal technical fault that cannot be rectified by the user.

Consult your installer or a qualified repair engineer.

The fuse blows or the RCD trips regularly

Please contact your installer or a qualified repair engineer.

The range will not switch on

Has the wiring system in the house blown a fuse or tripped an earth leakage circuit breaker?

Has the range been correctly connected to the mains supply?

The induction cooktop is noisy

When using the induction cooktop there may be some 'noise' emitted from the pan. This is normal and may be most noticeable when cooking on high power settings or if 5 pans are used simultaneously. The type of pan may also contribute to induction 'noise'.

Steam is coming from the oven

When cooking foods with a high water content (e.g. oven chips) there may be some steam visible at the rear grille. Take care when opening the oven door, as there may be a momentary puff of steam when the oven door is opened. Stand well back and allow any steam to disperse.

An oven fan is noisy

The sound of the oven fan may change as the oven heats up – this is perfectly normal.

What cleaning materials are recommended for the range?

See the 'Cleaning' section for a full list of recommended cleaning materials.

We DO NOT recommend corrosive or caustic cleaners as these may damage your range.

The knobs get hot when I use the oven, can I avoid this?

Yes, this is caused by heat rising from the oven, and heating them up. **DO NOT** leave the oven door open.

The fascia gets hot when I use the oven or broiler

The range is cooled by a fan. If the fascia becomes excessively hot when the range is in use then the cooling fan may have failed. Should this occur please contact your installer, a qualified repair engineer or Customer Service to arrange for its repair.

If there is an installation problem and I don't get my original installer to come back to fix it who pays?

You do. Service organizations will charge for their call outs if they are correcting work carried out by your original installer. It is in your interest to track down your original installer.

Food is cooking too slowly, too quickly, or burning

Cooking times may differ from your previous oven. Check that you are using the recommended temperatures and shelf positions.

See the oven cooking guide section of the instructions. The oven control settings and cooking times are intended to be used only as a guide.

Individual tastes may require the temperature to be altered either way, to get the results you want. Try cooking at a higher or lower temperature setting.

The oven is not cooking evenly

If you are cooking a large item, be prepared to turn it round during cooking.

If two shelves are used, check that space has been left for the heat to circulate. When a baking sheet is put into the oven, make sure it is placed centrally on the shelf.

Check that the door seal is not damaged.

A dish of water when placed on the shelf should be the same depth all over. (For example, if it is deeper at the back, then the back of the range should be raised up or the front lowered.)

If the range is not level arrange for your supplier to level it for you.

Oven not coming on

Is the power on?

If not there may be something wrong with the power supply. Is the range supply on at the circuit breaker?

Have you set a cooking function?

Oven temperature getting hotter as the range gets older

If turning the knob down has not worked or only worked for a short time then you may need a new thermostat. This should be changed by a qualified service engineer.

The oven light is not working

The bulb has probably blown. You can buy a replacement bulb (which is not covered under the guarantee) from most electrical stores. Ask for a 40W - 120V halogen lamp (G9) (**Fig. 6.1**).

Before removing the existing bulb, turn off the power supply and make sure that the oven and bulb have cooled. Open the oven door and remove the oven shelves.

Remove the bulb cover by turning it a quarter turn, counter-clockwise. It may be very stiff (**Fig. 6.2**)

Pull the existing bulb to remove it. When handling the replacement bulb, avoid touching the glass with your fingers, as oils from your hands can cause premature failure. Push, click in the replacement bulb.

Replace the bulb cover by turning it a quarter turn, clockwise. Turn on the circuit breaker and check that the bulb now lights.

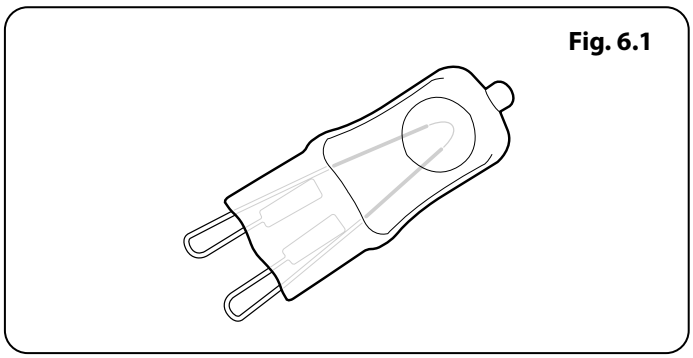

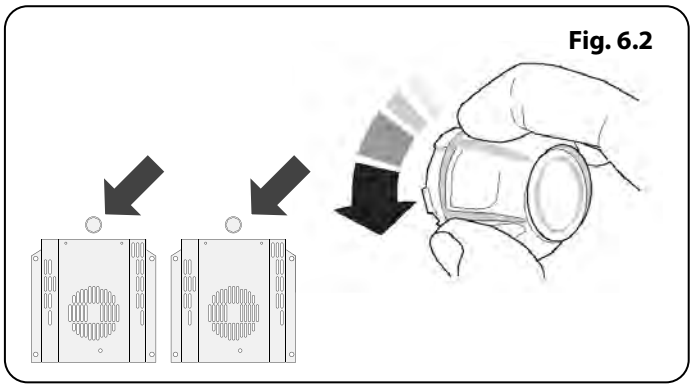

7. Installation Instructions

WARNING!

The anti-tip device supplied with this range must be installed when the appliance is installed. This will reduce risk of tipping of the appliance from abnormal usage or by excessive loading of the oven door.

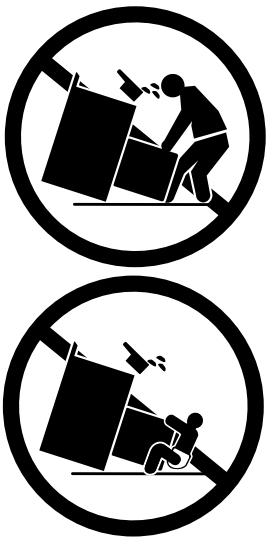

⚠WARNING!

- **ALL RANGES CAN TIP.**
- **INSTALL ANTI-TIP BRACKET PACKED WITH RANGE - SEE INSTALLATION INSTRUCTIONS.**
- **A CHILD OR ADULT CAN TIP THE RANGE AND BE KILLED.**
- **ENGAGE THE RANGE TO THE ANTI-TIP DEVICE - SEE INSTALLATION INSTRUCTIONS.**
- **RE-ENGAGE THE ANTI-TIP DEVICE IF THE RANGE IS MOVED.**
- **FAILURE TO DO SO CAN RESULT IN DEATH OR SERIOUS BURNS TO CHILDREN OR ADULTS.**

The following symbols are related to Safety and are used on the product and throughout this manual.

Meaning / Description	Symbol
WARNING / CAUTION An appropriate safety instruction should be followed or caution to a potential hazard exists.	
DANGEROUS VOLTAGE To indicate hazards arising from dangerous voltages.	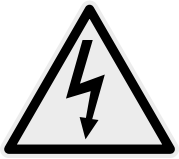
PROTECTIVE EARTH (GROUND) To identify any terminal which is intended for connection to an external conductor for protection against electric shock in case of a fault, or the terminal of a protective earth (ground) electrode.	

Meaning / Description	Symbol
HEAVY This product is heavy and reference should be made to the safety instructions for provisions of lifting and moving.	
DISCONNECT MAINS SUPPLY Disconnect incoming supply before inspection or maintenance.	

READ THESE INSTRUCTIONS FULLY BEFORE USE
SAVE THESE INSTRUCTIONS FOR FUTURE REFERENCE SAVE THE INSTALLATION INSTRUCTIONS FOR THE LOCAL ELECTRICAL INSPECTOR'S USE

8. Service and parts

Firstly, please complete the appliance details below and keep them safe for future reference – this information will enable us to accurately identify the particular appliance and help us to help you. Filling this in now will save time and inconvenience if you later have a problem with the appliance. It may also be of benefit to keep your purchase receipt with this leaflet. You may be required to produce the receipt to validate a warranty field visit.

Dealer's Name and Address	
Name of Appliance	
Appliance Serial Number*	
Fuel Type	
Date of Purchase	
Installer's Name, Address and Telephone No.	
Date of Installation	

* This information is on the appliance data badge.

If you have a problem

In the unlikely event that you have a problem with your appliance, please refer to the rest of this booklet, especially the problem solving section, first to check that you are using the appliance correctly.

If you are still having difficulty, please contact Tech Support at 800.914.4799 or email techsupp@middlebyresidential.com.

Please note

For warranty information or to register your AGA range, email customersupport@middlebyresidential.com. You may also refer to the warranty document provided with the appliance or contact 888.845.4641 Option 3.

Out of warranty

We recommend that our appliances are serviced regularly throughout their life to maintain the best performance and efficiency. The frequency of service will depend on usage – for normal usage once a year should suffice. Service work should only be carried out by a suitably Authorized Person.

Spare parts

To maintain optimum and safe performance, we recommend that only genuine spare parts are used. **DO NOT** use re-conditioned or unauthorized controls. Contact 888.845.4641 Option 1 or email parts@middlebyresidential.com.

9. Installation safety instructions

Regulations

Installation of this range must conform with local codes.

This range has been designed and certified to the requirements of UL 858 & CSA C22.2 E60335-2-6.

This appliance is to be installed in accordance with National, regional and electrical codes by a qualified person.

The range must be electrically grounded in accordance with local codes or, in the absence of local codes, in accordance with the National Electrical Code (NFPA 70, latest edition). In Canada, electrical grounding must be in accordance with the current CSA C22.1 Canadian Electrical Code Part 1 and/or local codes.

IMPORTANT!

Observe all governing codes and ordinances.

Save these instructions for the local electrical inspector's use.

For your safety

DO NOT store or use combustible materials, gasoline or other flammable vapors and liquids in the vicinity of this or any other appliance.

This appliance must be grounded.

Isolate electrical supply before installation.

This appliance is heavy. Ensure you have the correct facilities to complete the move. To find the weight of the appliance refer to the "Technical data".

Ensure all clearances are followed. Refer to "Positioning the range".

Improper installation, adjustment, alteration, service or maintenance can cause injury or property damage. Refer to this manual. For assistance or additional information, consult a qualified, appointed AGA Service Agent.

IMPORTANT!

Remove all packing material and literature from ovens before connecting the electrical supply to range.

Have your range installed by a qualified installer.

Your range must be electrically grounded in accordance with local codes or, in the absence of local codes, in accordance with the National Electrical Code (NFPA 70, latest edition).

DO NOT install your range on a substrate that cannot withstand 180 °F (82 °C).

DO NOT install your range directly onto carpeting. Ensure an appropriate, non-combustible, substrate is installed prior to installing the range.

Make sure the wall coverings around the range can withstand heat generated by the range up to 200 °F (93 °C).

Avoid placing cabinets above the range. There must be a gap of at least 30" (762 mm) between the top of the range and any combustible surface above it.

If a ventilating hood is installed above the range follow the installation instructions supplied with the hood.

Items of interest to children should not be stored above a range – children climbing on the range to reach items could be seriously injured.

To eliminate the risk of burns or fire by reaching over heated surface units, cabinet storage space located above the surface units should be avoided.

Location of the range

The range may be installed in a kitchen/kitchen dining area but **NOT** in a room containing a bath or shower.

The range is freestanding and should not be placed on a separate base.

The range should be positioned on a solid substrate.

Your range is heavy DO NOT place on soft floor coverings, such as cushioned vinyl or carpeting.

Use care when moving the range on cushioned vinyl or carpeted flooring.

When the floor covering ends at the front of the range, the area that the range will rest on should be built up to the same level or higher than the floor covering.

IMPORTANT - This will allow the range to be moved for cleaning or servicing. Also, make sure your floor covering will withstand 180°F. (See the Installation Safety Instructions section).

IMPORTANT - Make sure the wall coverings around your range can withstand the heat generated (up to 200°F) by the range. (See the Installation Safety Instructions section).

10. Installation

You will also need the following tools and equipment to complete the range installation satisfactorily.

1. Multimeter
2. Electric drill
3. Masonry drill bit & anchors (only required if installing the range on a stone or concrete floor)
4. Steel tape measure
5. Phillips head screwdriver
6. Flat head screwdriver
7. Allen keys (provided in pack)
8. Level
9. Open-end or adjustable wrench
10. Pencil and ruler
11. Pipe wrenches
12. 9⁄16“ (13 mm) socket wrench

Checking the parts:

2 x Telescopic rack with runners	Rear Flue Grille
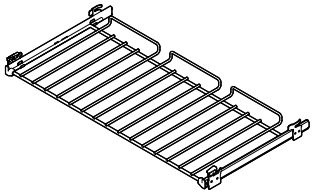	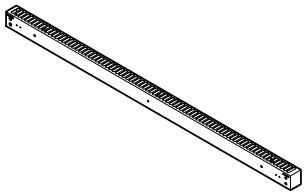
1 pastry tray	1 flat rack
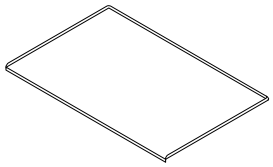	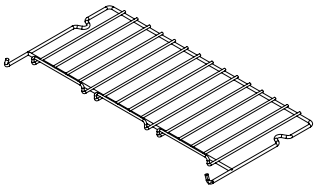
Toe kick	Anti-tip device
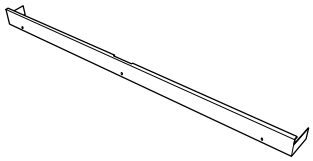	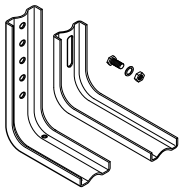
Handrail	
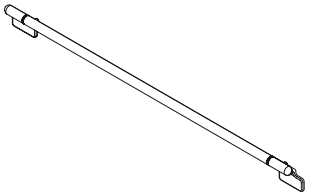	

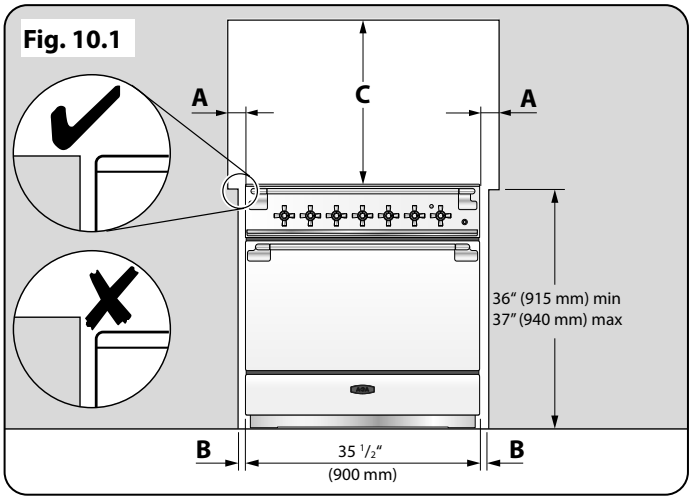

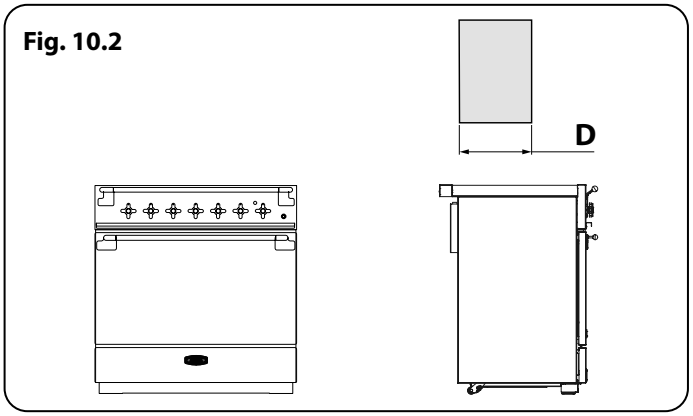

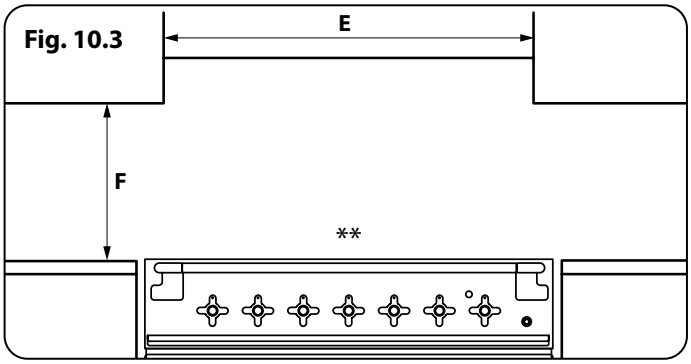

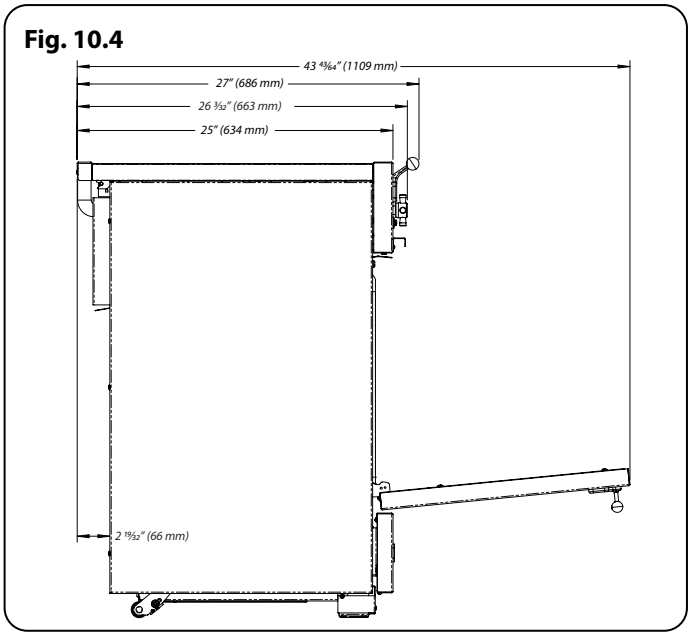

Positioning the range

Fig. 10.1, **Fig. 10.2** and **Fig. 10.3** show the minimum recommended distances and clearances from the range to nearby surfaces (see **Table 10.1**).

We recommend a gap of no more than 3⁄16" (5 mm) (see **Table 10.1**) either side of the appliance for moving the range. It must be possible to move the range in and out for cleaning and servicing.

Above hotplate surround should be level with, or above, any adjacent work surface (**Fig. 10.1**).

**Any rangehood should be installed in accordance with the hood manufacturer's instructions.*

***Any splashback must be fitted in accordance with the manufacturer's instructions. Allowance should be made for the additional height of the flue trim, which is fitted to the rangetop.*

Surfaces of furniture and walls at the sides and rear of the appliance should be heat, splash and steam resistant. Certain types of vinyl or laminate kitchen furniture are particularly prone to heat damage and discoloration.

We cannot accept responsibility for damage caused by normal use of the range to any material that de-laminates or discolors at temperatures less than 149°F/65°C above room temperature.

The depth of the range is 27⅝" (701.3 mm) overall (**Fig. 10.4**).

For safety reasons, curtains must not be sited immediately behind the range.

SERVICING - WARNING
Disconnect from electricity before servicing. Check appliance is safe when you have finished.

Clearances to combustibles

Dimension	Description	USA	Canada
A	Gap between side of appliance and adjacent vertical surface ABOVE cooktop level	1 3⁄16" (30 mm) ***1***	1 3⁄16" (30 mm) ***1***
B	Gap between side of appliance and adjacent vertical surface BELOW cooktop level	3⁄16" (5 mm)	½" (12 mm)
C	Gap between cooktop level and any horizontal combustible surface	31 ½" (800 mm) ***2***	31 ½" (800 mm) ***2***
D	Maximum depth of cabinets installed above the top surface cooking sections	13" (330 mm)	13" (330 mm)
E	Minimum distance between horizontal surfaces less than dimension C	35 ½" (900 mm)	36 3⁄8" (925 mm)
F	Minmum distance between horizontal cabinets and worktop surfaces adjacent to range	16 5⁄32" (410 mm)	16 5⁄32" (410 mm)
1 For non-combustible surfaces (such as unpainted metal or ceramic tiles) this gap is not required			
2 This dimension can be reduced to 24" (610 mm) if the bottom of the wooden or painted metal cabinet is preserved with a non-combustible material			

Table 10.1

Moving the range

On no account try and move the range while it is plugged into the electricity supply.

This appliance is heavy. Ensure you have the correct facilities to complete the move. To find the weight of the appliance refer to the "Technical data".

We recommend two people maneuver the range. Make sure that the floor covering is firmly attached, or removed to prevent it being disturbed when moving the range around.

To help you, there are two levelling rollers at the back, and two screw-down leveling feet at the front.

Remove the polystyrene base pack. From the front, tilt the range backwards and remove the front half of the polystyrene base **Fig. 10.5**. Repeat from the back and remove the rear half of the polystyrene base.

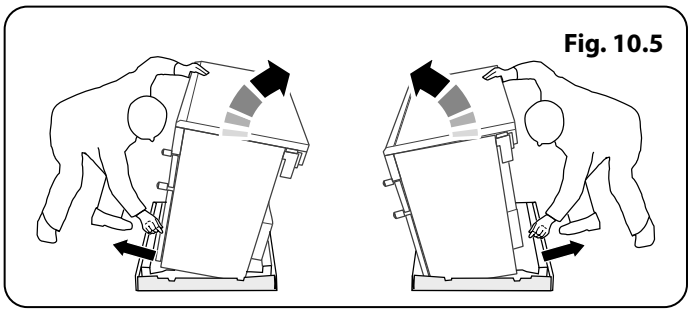
Fig. 10.5

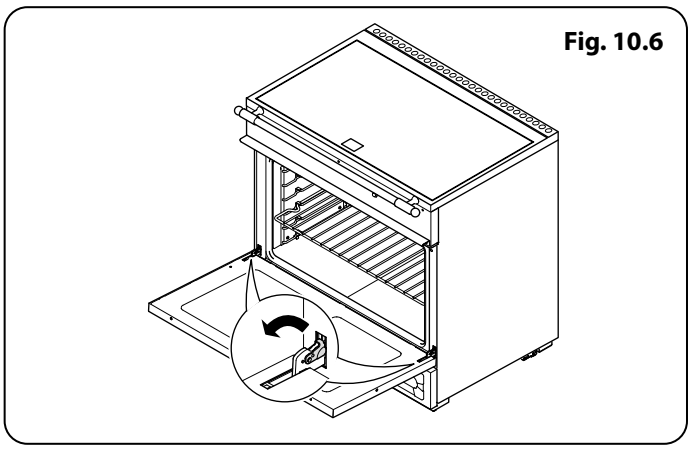
Fig. 10.6

Removing the door

Remove the oven door as follows: open the door fully. Swivel the locking 'U' clips forward to the locking position (**Fig. 10.6**). To remove the oven door, grip the sides of the door, lift upwards and then slide the door forwards (**Fig. 10.7**) and remove.

Door is very heavy - take care.

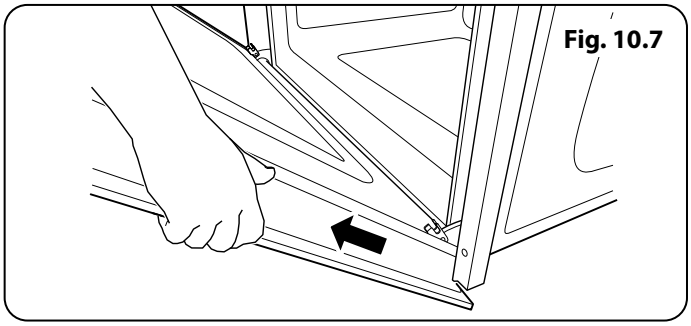
Fig. 10.7

Lowering the two rear rollers

To adjust the height of the rear of the range, first fit a 13 mm socket wrench onto the hexagonal adjusting nut **(Fig. 10.8)**. Rotate the nut – clockwise to raise – counter-clockwise to lower.

Make 10 complete (360°) turns clockwise. Make sure you lower **BOTH REAR ROLLERS**.

Unfold the rear edge of the cardboard base tray. Get a good grip on the top of the oven cavity panel as you move the oven. Carefully push the range backwards off the cardboard base. Remove the base tray.

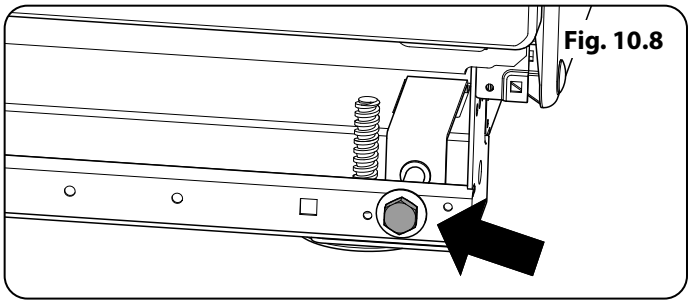
Fig. 10.8

Fig. 10.9

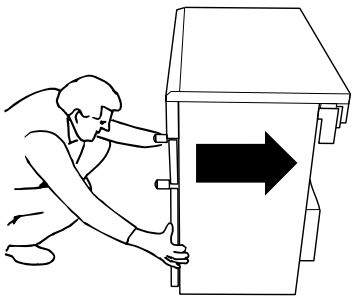

Fig. 10.10

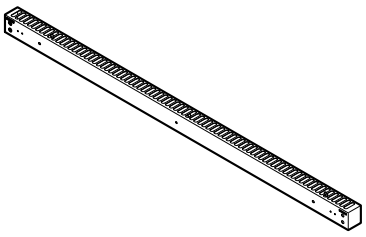

Fig. 10.11

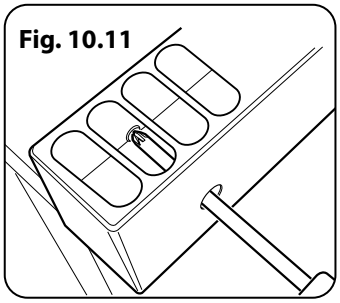

Fig. 10.12

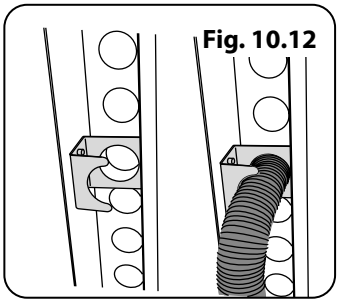

Fig. 10.13

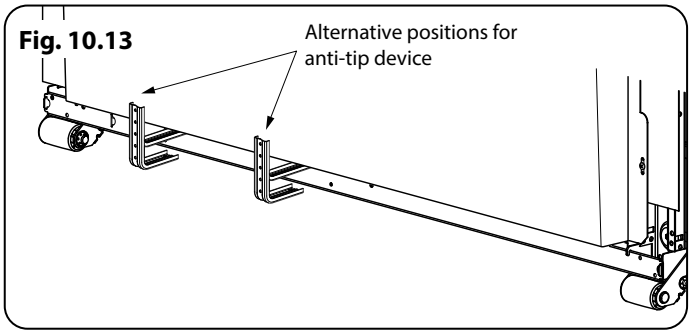

Fig. 10.14

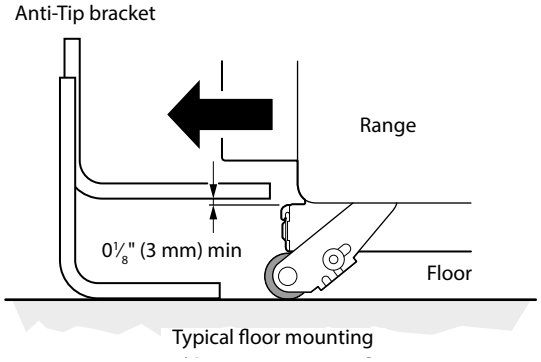

Position the range close to its final position, leaving just enough space to get behind it (**Fig. 10.9**).

IMPORTANT: Remove all tape and packaging. Check to be sure that no range parts have come loose during shipping.

Installing the flue grille

The flue grille is packed separately (**Fig. 10.10**).

The larger of the holes along the sides are for screwdriver access and should face to the rear. Use the screws supplied to hold the grille in place (**Fig. 10.11**).

Clip the flexible extension of the oven flue to the flue grille using the clip provided inside the flue grille (**Fig. 10.12**).

Leveling

It is recommended that you use a spirit level on a shelf in the oven to check the level.

Place the range in its intended position, taking care not to twist it within the gap between the kitchen units as damage may occur to the range or the units.

The front feet and rear rollers can be adjusted to level the range. To adjust the height of the rear of the range turn the adjusting nuts at the front bottom corners of the range.

Anti-tip device

NOTE: The range must be set to the correct height and leveled before the anti-tip bracket is installed.

Fitting the anti-tip device

A range using a flexible connector must be secured with a suitable anti-tip device.

A suitable anti-tip device is supplied and shown in **Fig. 10.13**.

When fitting the anti-tip bracket (**Fig. 10.14** and **Fig. 10.15**), adjust the bracket to give the smallest practicable clearance between the bracket and the engagement slot in the rear of the range.

Fit the bracket so that it engages as far as possible over the chassis of the range.

DO NOT operate the range before the appliance is in its installed position and the anti-tip devices are engaged.

If the appliance is moved ensure that the anti-tip devices are re-engaged and the range has been returned to its original installed position.

DO NOT step, lean or swing on the range doors or drawer as this could tip the range and result in serious injury or death.

Wall fixing

Where floor fixing is impractical and provided that the outer anti-tip bracket can be attached to a solid wall, the anti-tip device may be attached to a wall (**Fig. 10.15**). Make sure to use suitable screws and fixings.

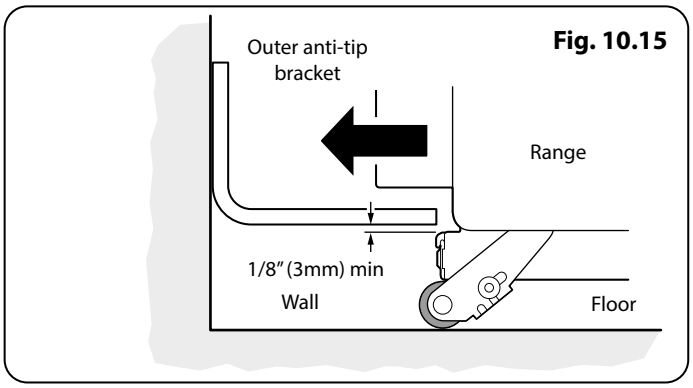

Fig. 10.15

Installing the toe kick

Remove the 3 screws for the toe kick mounts along the front bottom edge of the range (**Fig. 10.16**). Fasten the toe kick using these screws (alternative color screws can be found in the loose parts pack).

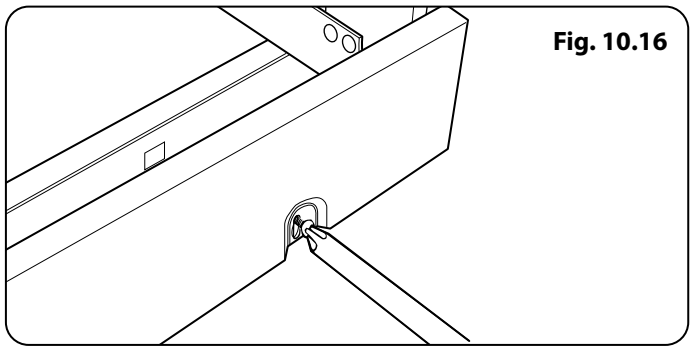
Fig. 10.16

Side panel extension kit *(optional extra)*

Two side extension panels are supplied with the range. These can be installed where the side of the range is exposed. The extension installation must be performed by a qualified installer, preferably during installation of the appliance (**Fig. 10.17**).

Kit Contents:

Side panel extension	2
M5 screw	4
M5 nut	4
Large washer	4
Shakeproof washer	4

Procedure

Place a screw and washer in the top hole in the rear edge of the range side panel. Add a shakeproof washer and start the nut on the screw threads so that the screw is loosely held in place. Repeat with the other hole (**Fig. 10.18**).

Slide the side extension in from the side behind the washers (**Fig. 10.19**).

Tighten the top and bottom screws to hold the side extension in place.

Reposition the range making sure the anti-tip device is re-engaged properly when the range is replaced. Failure to take this precaution could result in tipping of the range and cause injury.

NOTE: Check that the extension panel does not foul the mains lead or connection when the range is pushed back Reconnect the electricity supply.

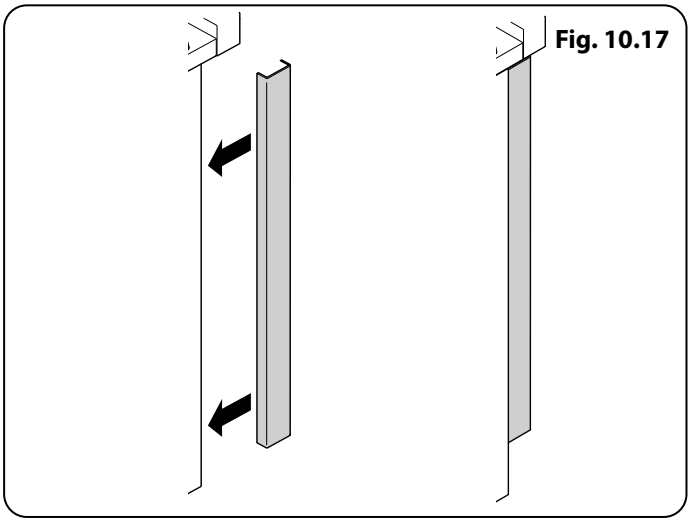
Fig. 10.17

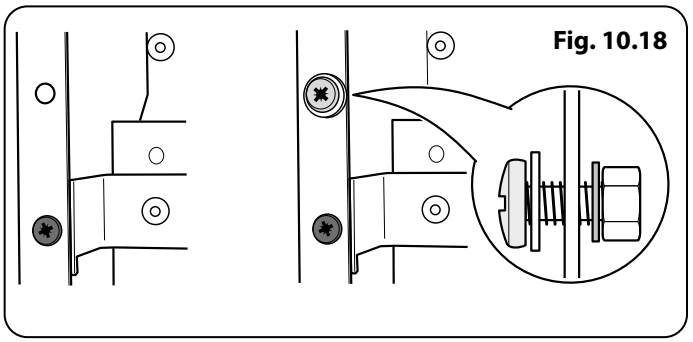
Fig. 10.18

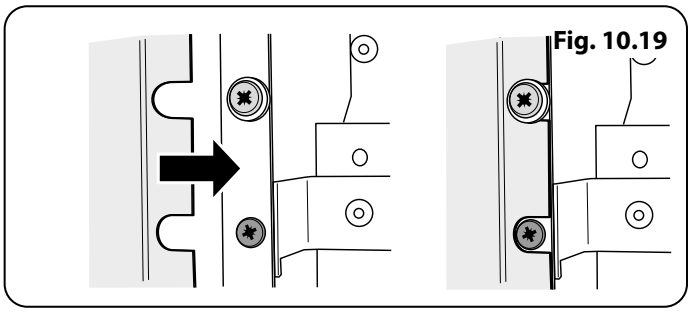
Fig. 10.19

11. Electrical connection

Fig. 11.1

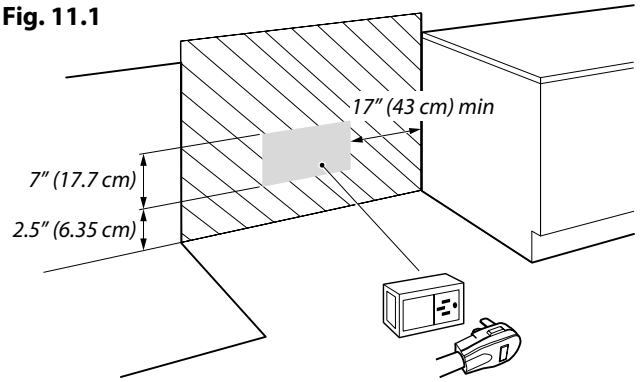

The dimensions shown are correct when the range is set to its lowest position

Fig. 11.2

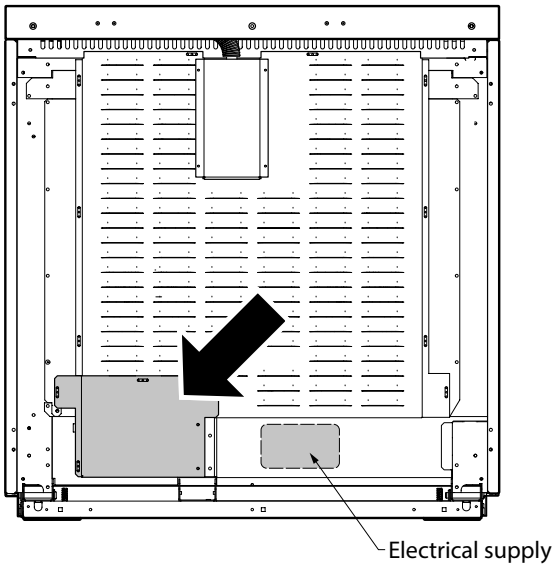

Have your appliance properly installed and grounded by a qualified technician. The installation must conform with local codes, or in the absence of local codes, in accordance with the National Electrical Code NFPA 70 or the Canadian Electric Code, CSA C22.1.

Electrical requirements

For personal safety, DO NOT use an extension cord with this appliance. Remove the house fuse or open the circuit breaker before beginning installation.

WARNING Electrical Grounding Instructions. This appliance is shipped with a (four-prong) grounding plug for your protection against shock hazard and should be plugged directly into a properly grounded receptacle. DO NOT cut or remove the grounding prong from this plug.

Prior to connecting the power cord to the wall socket, inspect the cable for any damage that may have occurred. In the event of damage, please consult your electrical installer.

Ensure that the power cord is routed so that it cannot become damaged during the installation.

This appliance must be supplied with the proper voltage and frequency, and connected to an individual, properly grounded branch circuit, protected by a circuit breaker or time-delay fuse, as noted on the rating plate.

Wiring must conform to National Electric Codes. If the electric service provided does not meet the above specifications, have a licensed electrician install an approved outlet.

Because range terminals are not accessible after the range is in position, flexible service conduit or cord must be used.

Provide proper electrical supply

This range must be supplied with 240 V 60 Hz, and connected to an individual, properly grounded branch circuit protected by a circuit breaker or time-delay fuse. If the electrical service provided does not meet the above specifications, it is recommended that a licensed electrician install an approved outlet.

Recommended electrical outlet locations

Locate the electric supply as illustrated (**Fig. 11.1**).

When connecting using a NEMA 14-50R receptacle, if possible position it so that it can be accessed through the opening at the rear of the drawer cavity. The range can then be easily disconnected for servicing, etc.

Plug the range power cord into a properly grounded wall receptacle.

Connecting if the supplied cord and plug is not suitable

To access the electrical connections, undo the screws and remove the electrical cover (**Fig. 11.2**).

Disconnect the electrical supply before servicing.

Fitting a 3-Wire Power Cord

Disconnect the supplied power cord from the terminal block and ground post. Keep the terminal block parts; you will need them. Slacken the strain relief clamp from the power cord, untighten the 2 screws (**Fig. 11.3**) and remove the power cord.

Insert the new power cord through the strain relief device but do not tighten the device yet.

Your range is supplied with a ground strap that can be used when connecting to a three wire cord. Consult your electrician before changing the supplied cord kit (Fig. 11.7).

Fit the Ground strap to the ground and center terminal of the connector block (**Fig. 11.4**).

The neutral or ground wire of the power cord must be connected to the neutral terminal located in the center of the connector block. The power leads must be connected to the outside terminals (**Fig. 11.4**).

Make sure the connections are tight. Now tighten the strain relief device to clamp the power cord.

Refit the electrical connection cover.

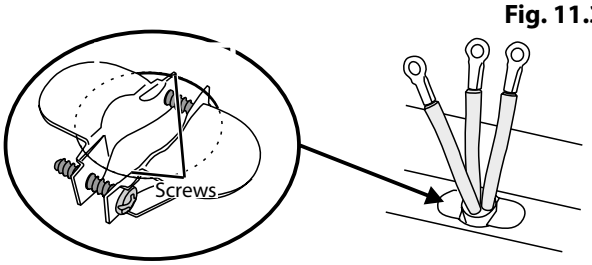

Fig. 11.3

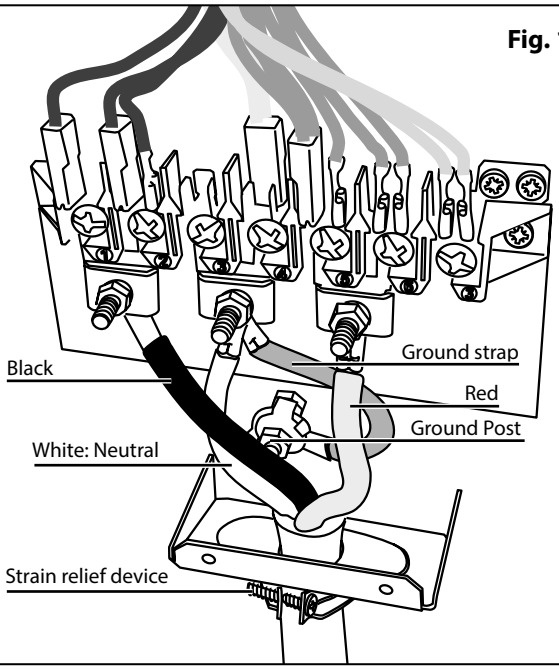

Fig. 11.4

Fig. 11.5

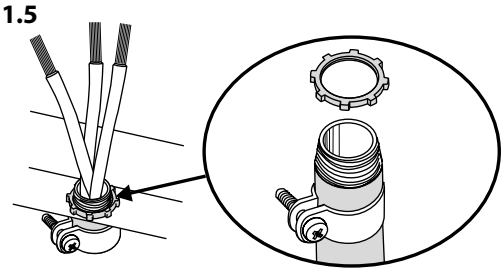

Fig. 11.6

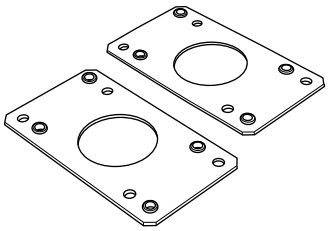

Fig. 11.7

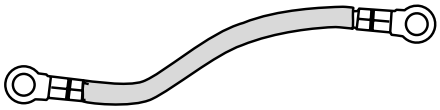

Fig. 11.8

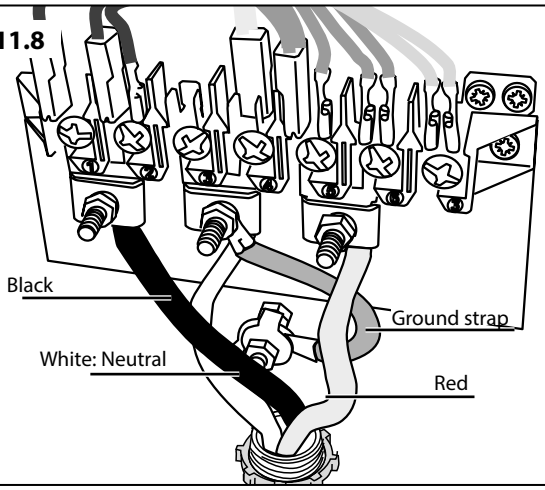

3-Wire Conduit Installation

Disconnect the supplied power cord from the terminal block and ground post. Keep the terminal block parts; you will need them. Remove the strain relief clamp from the power cord and remove the power cord and strain relief clamp from the mounting bracket.

The range is shipped with reducer plates to give a 1 ⅛" diameter opening for conduit connection (**Fig. 11.5**). Find the reducer plates (**Fig. 11.6**) in the instruction pack and fit them to the mounting bracket.

Fit a squeeze connector (not supplied with the range), to your conduit. Insert the conduit through the reducer plates on the mounting bracket. Allow enough slack to easily attach the wires to the terminal block.

NOTE: Do not install the conduit without a squeeze connector.

A Ground strap is supplied in the conversion pack (**Fig. 11.7**). Fit the Ground strap to the ground and center terminal of the connector block.

The neutral or ground wire of the power cord must be connected to the neutral terminal located in the center of the connector block. The power leads must be connected to the outside terminals (**Fig. 11.8**).

NOTE: Make sure the wires are completely inserted into the terminals and secure connections are made.

Secure the squeeze connector in place in the bracket by tightening the squeeze connector screws.

Refit the electrical connection cover.

4-Wire Conduit Installation

Disconnect the supplied power cord from the terminal block and ground post. Keep the terminal block parts; you will need them. Remove the strain relief clamp from the power cord and remove the power cord and strain relief clamp from the mounting bracket.

The range is shipped with reducer plates to give a 1 ⅛" diameter opening for conduit connection (**Fig. 11.5**). Find the reducer plates (**Fig. 11.6**) in the instruction pack and fit them to the mounting bracket.

Fit a squeeze connector (not supplied with the range), to your conduit. Insert the conduit through the reducer plates on the mounting bracket. Allow enough slack to easily attach the wires to the terminal block.

NOTE: Do not install the conduit without a squeeze connector.

Fit the wires to the ground post and terminal block (**Fig. 11.9**)

NOTE: Make sure the wires are completely inserted into the terminals and secure connections are made.

Secure the squeeze connector in place in the bracket by tightening the squeeze connector screws.

Refit the electrical connection cover.

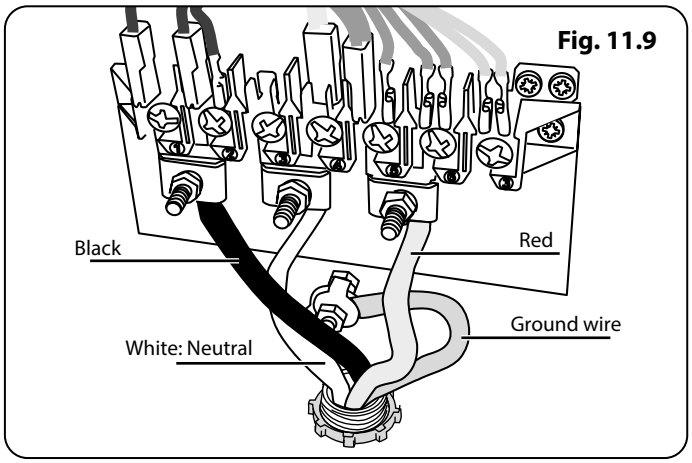

Fig. 11.9

Seal the Openings

Seal any openings in the wall behind the range and in the floor under the range when hookups are completed.

When all Connections are Completed

MAKE SURE THE FLOW OF COMBUSTION AND VENTILATION AIR TO THE RANGE IS UNOBSTRUCTED.

12. Final fitting and checks

Fig. 12.1

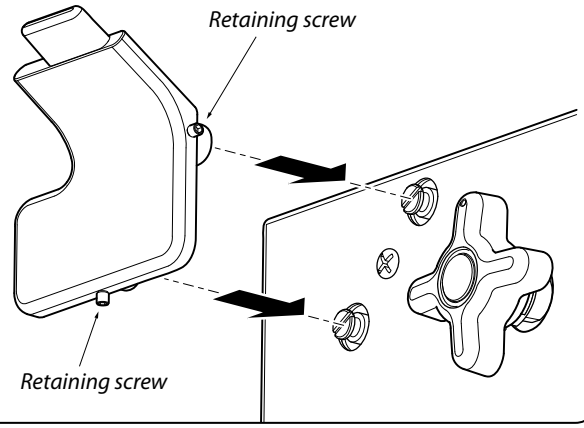

Fig. 12.2

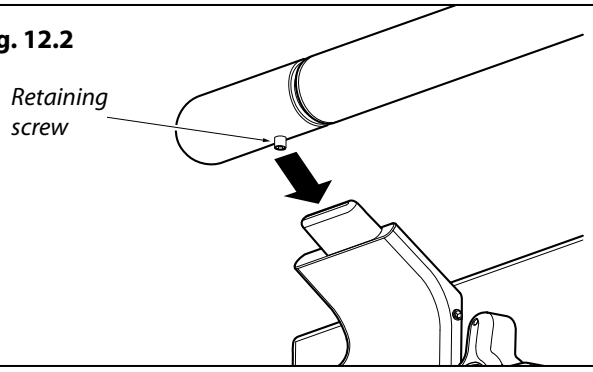

Fitting the handrail

1. Using the 2 mm Allen key supplied, loosen the two retaining screws in the base and side of the handrail support. Fit the handrail support onto the locating bosses on the fascia (**Fig. 12.1**).

NOTE: The handle support should face upwards.

2. Push the support back against the fascia and tighten the two retaining screws. Repeat for the other side. Check that each support is secure.
3. Locate the handrail onto the support tabs and, using the 3 mm Allen key supplied, tighten the one retaining screw in the bottom to secure repeat for the other side (**Fig. 12.2**).

Cooktop check

Refer to "Range Overview" and check operation of each cooking zone in turn. Be sure to use pans of the correct size and material.

Broiler check

Refer to "Range Overview" and check operation of the broiler and that it heats up*.

Oven check

Refer to "Range Overview" and check the operation of the oven*****. Check that the oven fans operate and the oven heats up.

*The cooling fan, located under the induction unit blows air out of the front of the appliance and should operate with this function.

Customer care

Installer: Please complete your details in this guide, inform the user how to operate the range and hand over the instructions.

Fitting the drawer

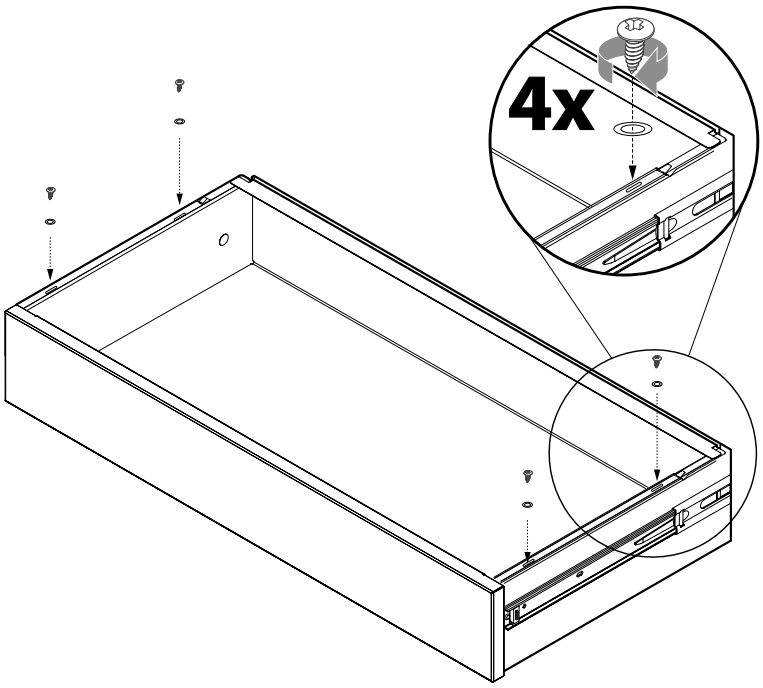

Removing the drawer

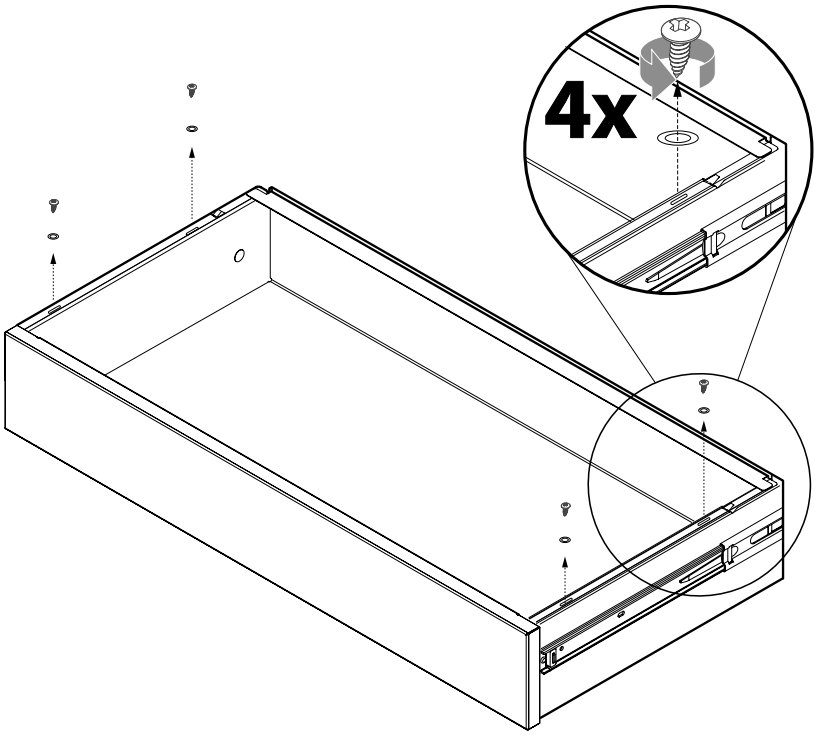

13. Circuit diagram

Cooktop

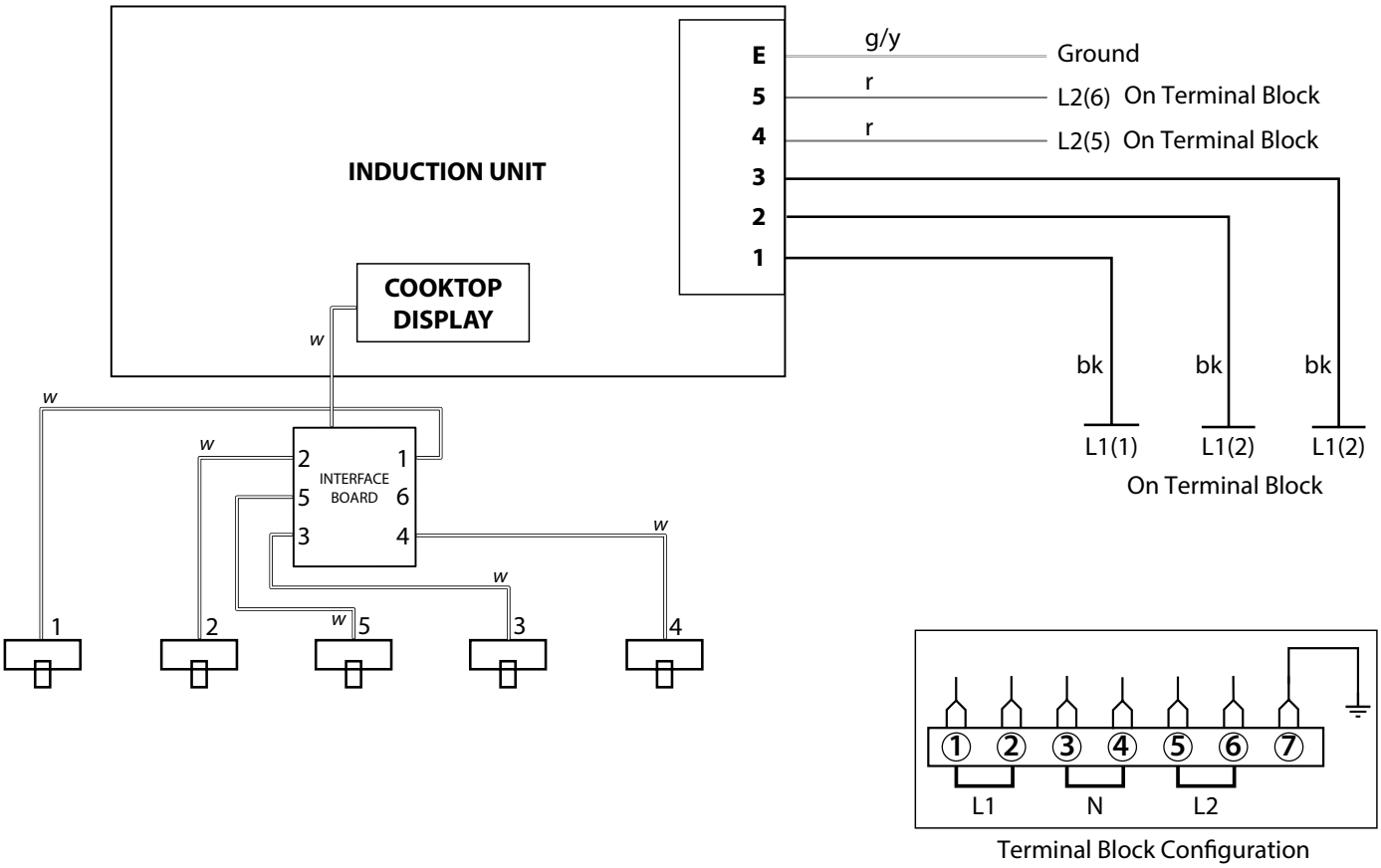

Key

The connections shown in the circuit diagram are for single-phase. The ratings are for 240V, 60Hz

Code	Description
1	Left-hand front element
2	Left-hand rear element
3	Right-hand rear element
4	Right-hand front element
5	Centre element

Code	Colour
w	White
bk	Black
r	red
g/y	Green / Yellow

Oven

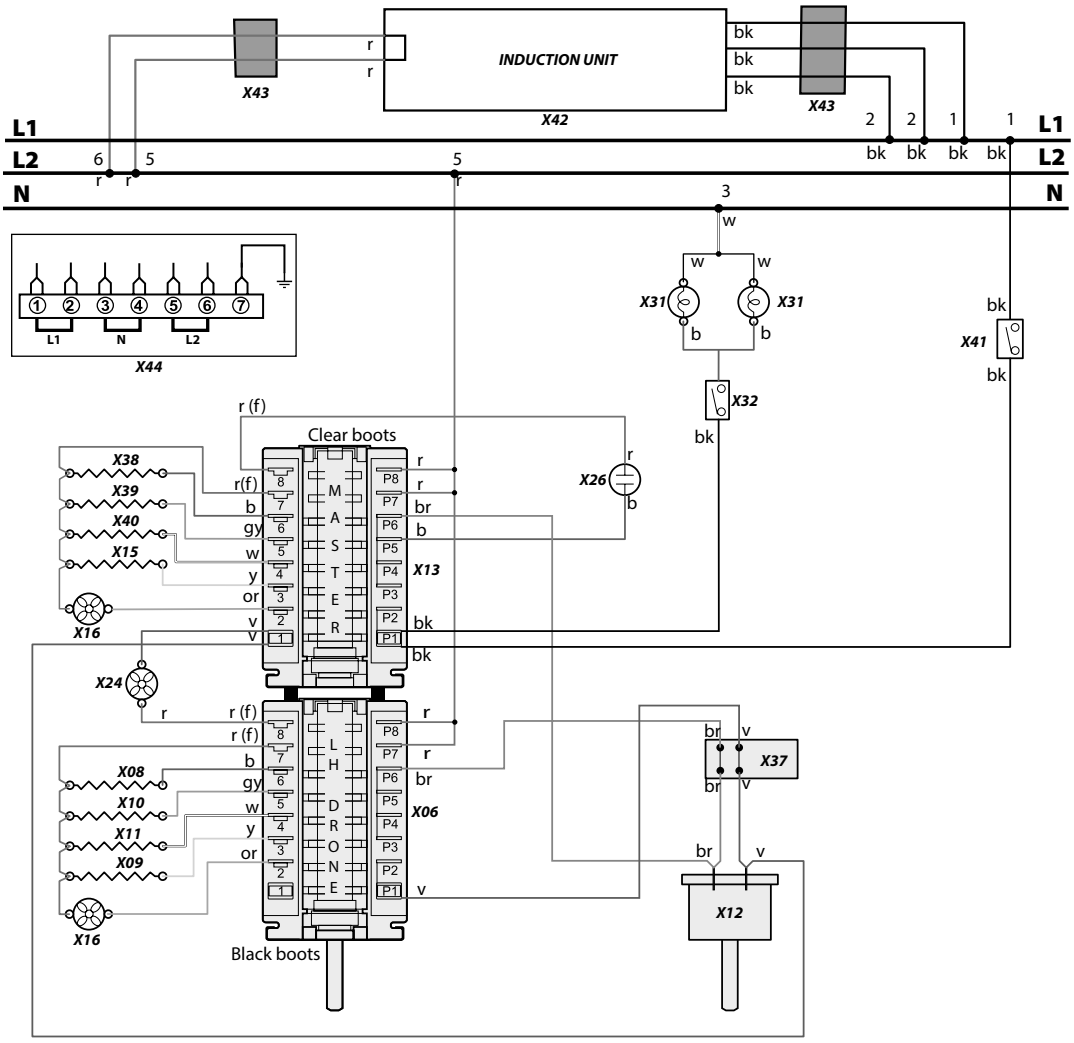

Code	Description
X06	Oven Multifunction Switch
X08	LH Base Element
X09	LH Fan Element
X10	LH Top Outer Element
X11	LH Top Inner Element
X12	Oven Thermostat
X13	Oven Multifunction Switch
X15	RH Fan Element
X16	Oven Fan
X24	Cooling Fan
X26	Neon

Code	Description
X31	Oven Light
X32	Oven Light Switch
X37	Divider Switch
X38	RH Base Element
X39	RH Top Element
X40	RH Top Inner Element
X41	Thermostat Protection
X42	Induction Unit
X43	Induction Connector Block
X44	Terminal Block

Code	Color
b	Blue
br	Brown
bk	Black
or	Orange
r	Red
v	Violet
w	White
y	Yellow
gy	Grey
r(f)	Red (flag)

14. Technical data

INSTALLER: Please leave these instructions with the user.

DATA BADGE LOCATION: Inside base drawer of cavity. Remove the drawer.

COUNTRY OF DESTINATION: USA, Canada.

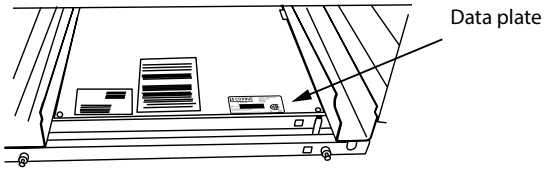

Connections

Electric Supply	240 V 60 Hz
Electric Rating	240V (2 Wire + N + Grd), 60Hz, 15.1 kW *
Branch Circuit Protection	50 A *
Connection Type	NEMA 14-50 P
Maximum total electric load 240 V (including oven fans, lights, etc.): * Load demand diversity calculation according to NFPA 70 article 220. Note: The maximum input at any time is given as both ovens fanned and broiler, plus cooling fan.	14.75 kW, (45 A)*

Dimensions

Model	Elise 36 Induction	
Overall height	minimum 35 ⅞" (911 mm)	maximum 36 ⅞" (936 mm)
Overall width	35 ½" (900 mm)	
Overall depth (inc. handles)	27 " (686 mm)	
Minimum space for cooktop	31 ½" (800 mm)	
Weight (unpacked)	403 LBS (183 Kg)	

Oven ratings

Fan element	3.77 kW
Top element	3.97 kW
Browning element	2.39 kW
Bottom element	1.59 kW

Cooktop ratings

Cooktop Zone	Max	Boost
Front Left	1.4 kW	2.2 kW
Rear Left	1.85 kW	3.0 kW
Center	2.3 kW	3.7 kW
Front Right	1.85 kW	3.0 kW
Rear Right	1.85 kW	3.0 kW

Oven data

Ovens	Multi-function
Maximum total electric load 240 V	3.97 kW
Usable volume (cubic feet)	4.9

Technical Reference Data

Reference	Name	kW	Amps	Voltage 240(rms)
X08	Left Hand Oven Base Element	0.75	3.13	240
X09	Left Hand Oven Fan Element	1.8	7.50	240
X10	Left Hand Oven Top Outer Element	0.75	3.13	240
X11	Left Hand Oven Top Inner Element	1.15	4.79	240
X15	Right Hand Oven Fan Element	1.8	7.5	240
X38	Right Hand Oven Base Element	0.75	3.13	240
X39	Right Hand Oven Top Outer Element	0.75	3.13	240
X40	Right Hand Oven Top Inner Element	1.15	4.79	240
X16	Oven Fan	-	0.25	240 / 60Hz
X24	Cooling Fan	0.012	-	240 / 60Hz
X12	Thermostat	246°C±11K	270° Angular Rotation	
		165°C±8K	180° Angular Rotation	
		60°C±11K	60° Angular Rotation	
X13	Master Switch (42.08000.032)		250V/16A/T150	
X06	Drone Switch (42.08000.044)		250V/16A/T150	

CONSUMER WARRANTY

ENTIRE PRODUCT – LIMITED TWO YEAR WARRANTY

Any cosmetic faults must be reported within 7 days of installation.

AGA warrants the replacement or repair of all parts of this range which prove to be defective in material or workmanship, with the exception of the painted or porcelain enamel finish or plated surfaces, for two year from the date of original purchase. Such parts will be repaired or replaced at the option of AGA without charge, subject to the terms and conditions set out below.

The warranty period against defects in the painted or porcelain enamel finish, or plated surfaces, is 90 days from the date of original purchase. **The warranty does not include replacement of oven lamps.**

OVEN ELEMENTS - LIMITED SECOND THROUGH THIRD YEAR WARRANTY

AGA warrants the oven heating elements against defects in material or workmanship for an additional two years. These parts will be repaired or replaced at the discretion of AGA without charge, but you pay for labor and transportation subject to the terms and conditions set out below.

TERMS AND CONDITIONS

1. This warranty applies only for single family domestic use when the range has been properly installed according to the instructions supplied by AGA and is connected to an adequate and proper utility service.

Damage due to faulty installation, improper usage and care, abuse, accident, fire, flood, acts of God, commercial, business or rental use, and alteration, or the removal or defacing of the serial plate, cancels all obligations of this warranty. Service during this warranty must be performed by a factory Authorized Service Person.

2. **Warranty applies to product only in the country in which it was purchased.**
3. AGA is not liable for any claims or damages resulting from any failure of the range or from service delays beyond their reasonable control.
4. To obtain warranty service, the original purchaser **must** present the original Bill of Sale, Model and Serial number. Components repaired or replaced are warranted through the remainder of the original warranty period only.
5. The warranty does not cover expenses involved in making this appliance readily accessible for servicing.
6. This warranty gives you specific legal rights. Additional warranty rights may be provided by law in some areas.
7. Adjustments such as calibrations, leveling, tightening of fasteners, or utility connections normally associated with original installation are the responsibility of the dealer or installer and not that of the Company.

TO ENSURE PROMPT WARRANTY SERVICE, SEND IN YOUR WARRANTY CARD WITHIN 10 DAYS OF PURCHASE.

If further help is needed concerning this warranty, contact:

PLACE OF PURCHASE _____

DATE OF PURCHASE _____

SERIAL NUMBER _____

MODEL NUMBER _____

Middleby Residential
4960 Golden Pkwy
BLDG 3
Buford, GA 30518
Business 770.932.7282
Fax 770.932.7292
Toll Free Telephone 800.241.9152

NOTE

Middleby Residential
4960 Golden Pkwy
BLDG 3
Buford, GA 30518
Business 770.932.7282
Fax 770.932.7292
Toll Free Telephone 800.241.9152

www.aga-ranges.com