# Steel Pull-Out Faucet - STL-PO-304 | 115.0361.293

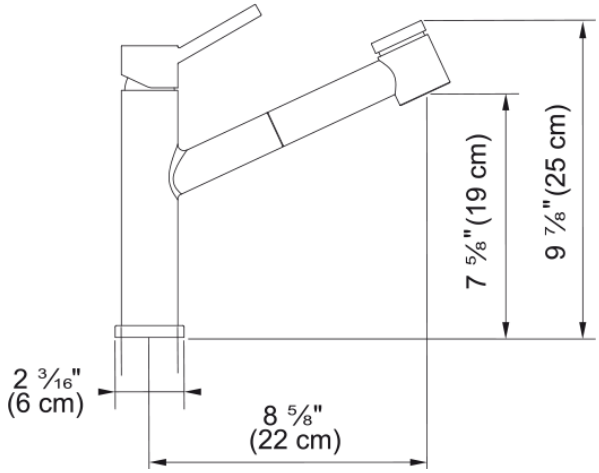


**Technical Data**

| | |
|---|---|
| **Aspect** | |
| Spout type | J - spout |
| Color | Stainless steel |
| Type of material | Stainless steel 304 |
| Flexible pullout hose material | Textile |
| Spray head material | Stainless steel |
| **Product Dimensions** | |
| Faucet hole diameter | 35 mm |
| Cartridge dimension | 35 mm |
| **Installation** | |
| Mounting type | Shank |
| Water supply hose connection | 1/2" |
| Water supply hose length | 800 mm |
| **Product specifications** | |
| Pressure | High pressure |
| Faucet type | Spray |
| Faucet operation | Side lever |
| Faucet rotation | 360° |
| **Product identification** | |
| Product brand | FRANKE |
| Product family | Mythos |
| Collection | Steel |
| **Features** | |
| Water saving feature | No |
| Type of aerator | Honeycomb |