FULL MOTION STEEL STUD MOUNT

LX600SW

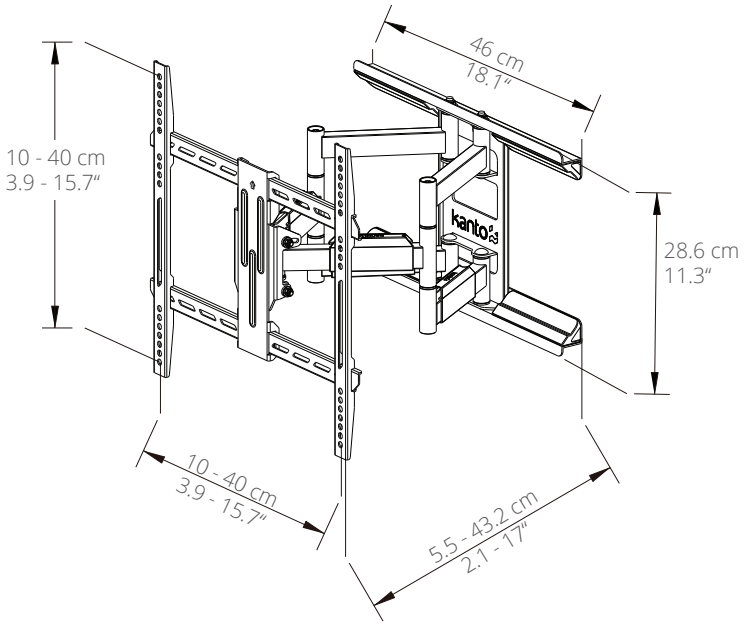

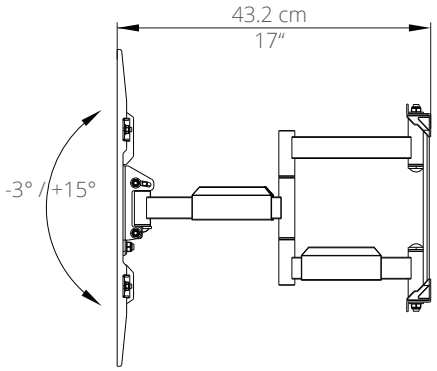

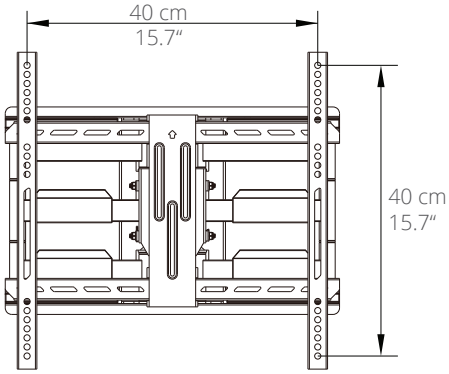

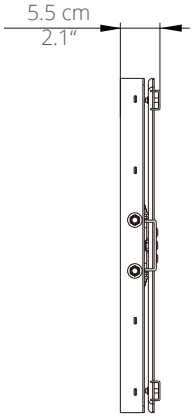

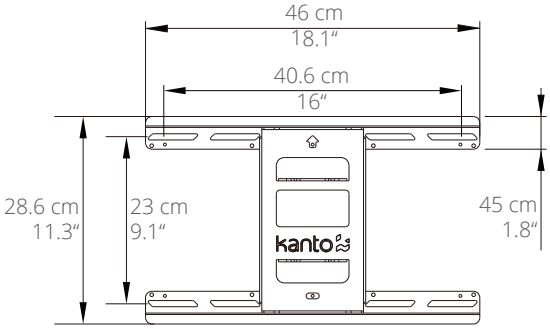

kanto
kantomounts.com