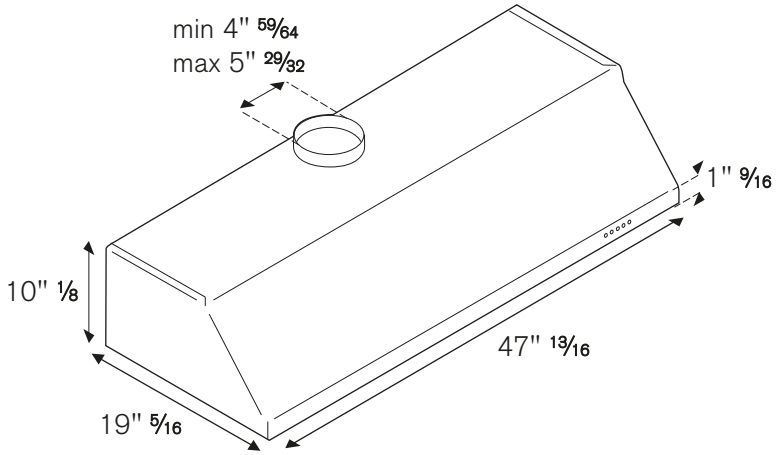
min 4" 59/64
max 5" 29/32
1" 9/16
10" 1/8
47" 13/16
19" 5/16

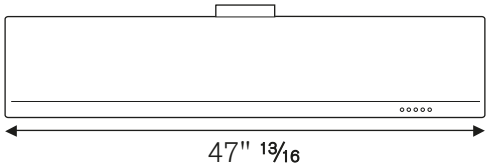
47" 13/16

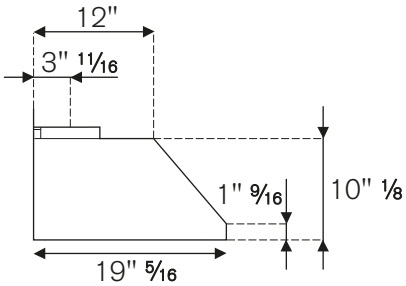
12"
3" 11/16
1" 9/16
10" 1/8
19" 5/16