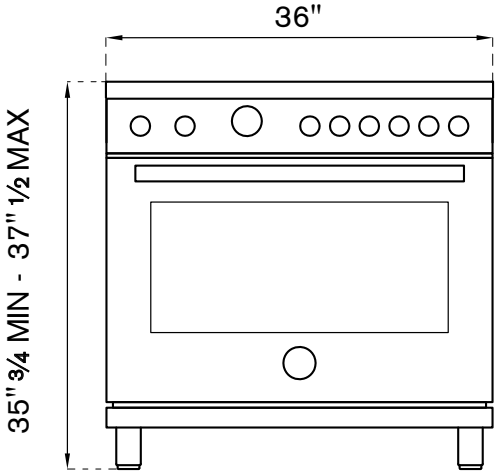
36"
35" 3/4 MIN - 37" 1/2 MAX

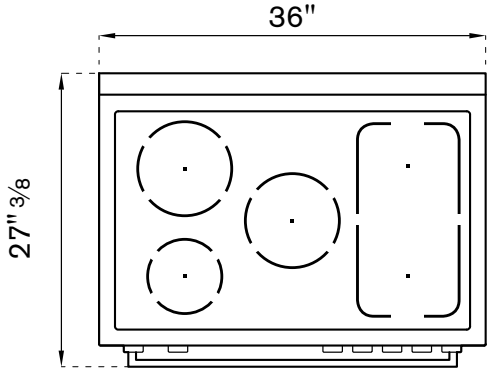
36"
27" 3/8

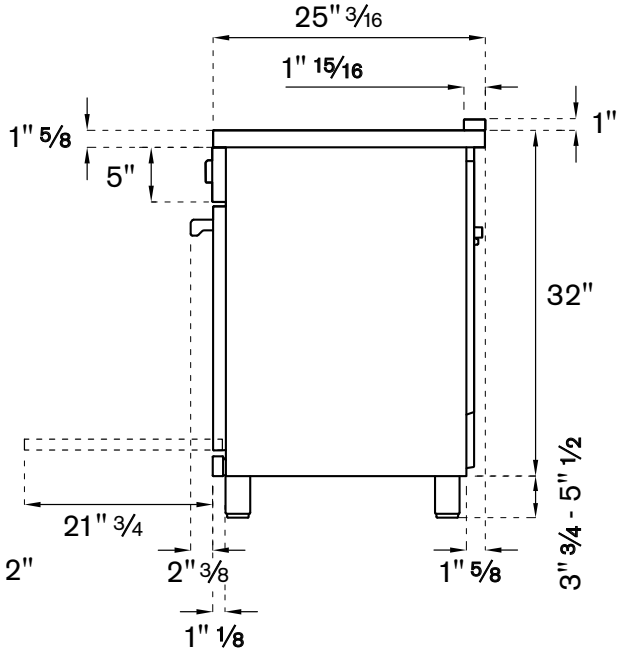
25" 3/16
1" 15/16
1" 5/8
1"
5"
32"
21" 3/4
2"
2" 3/8
1" 5/8
3" 3/4 - 5" 1/2
1" 1/8

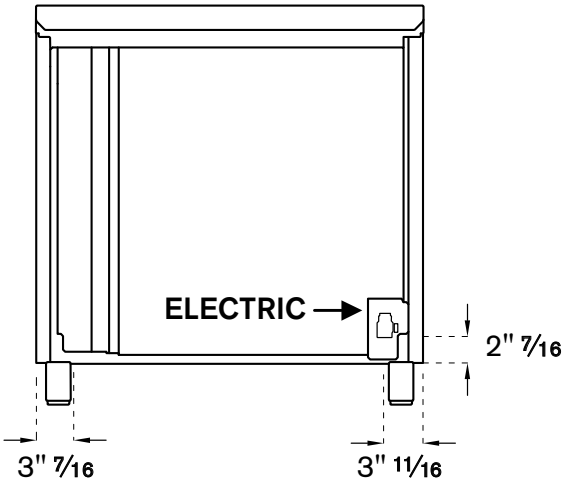
ELECTRIC
2" 7/16
3" 7/16
3" 11/16