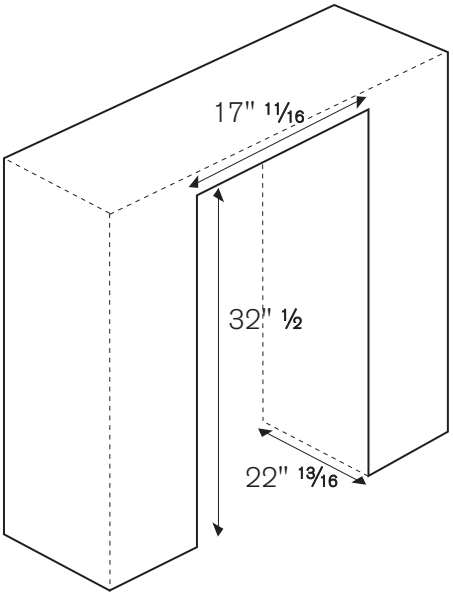
17" 11/16
32" ½
22" 13/16

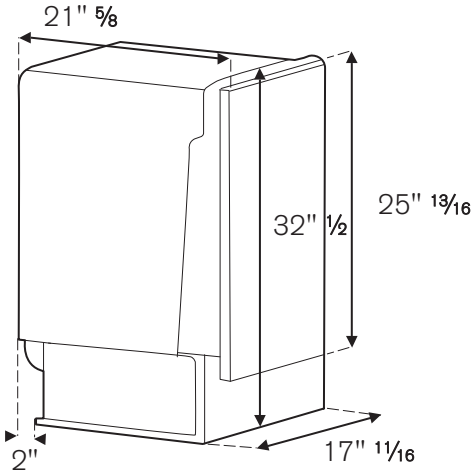
21" 5/8
32" ½
25" 13/16
2"
17" 11/16

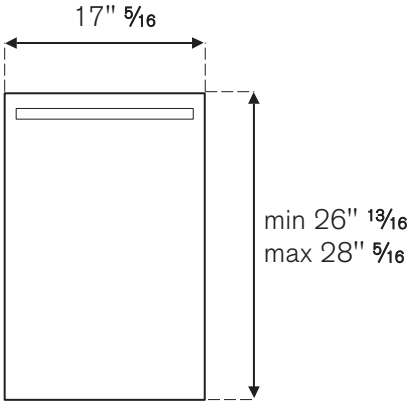
17" 5/16
min 26" 13/16
max 28" 5/16

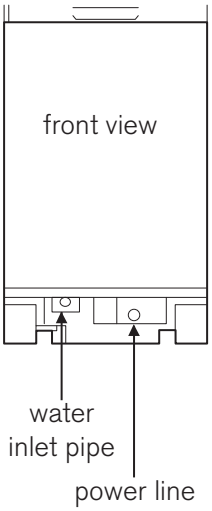
front view
water
inlet pipe
power line

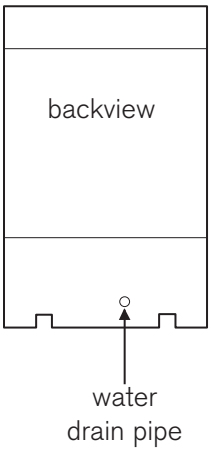
backview
water
drain pipe