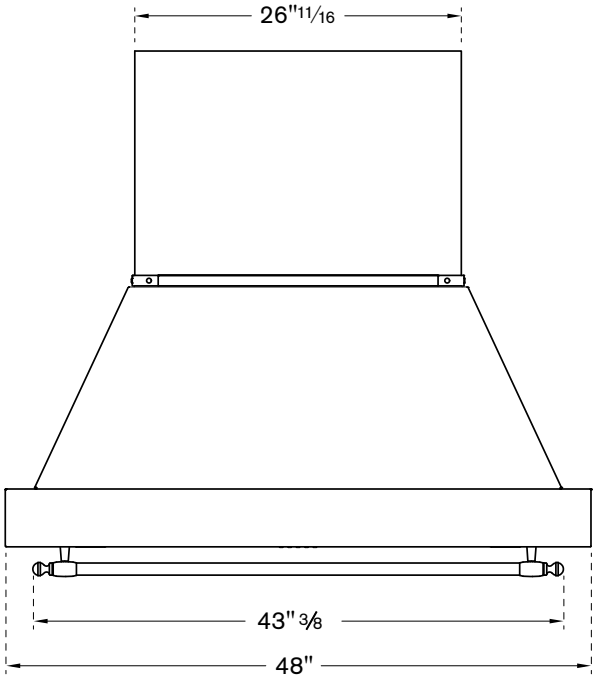
26" 11/16
43" 3/8
48"

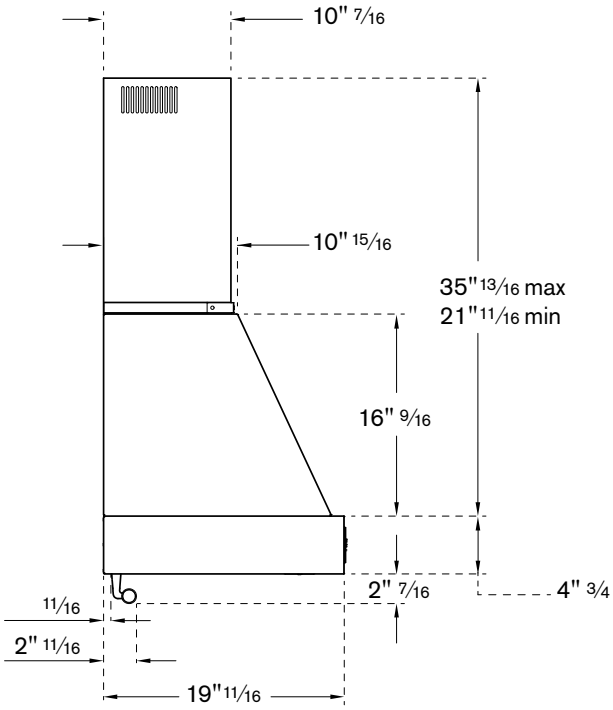
10" 7/16
10" 15/16
35" 13/16 max
21" 11/16 min
16" 9/16
2" 7/16
4" 3/4
11/16
2" 11/16
19" 11/16

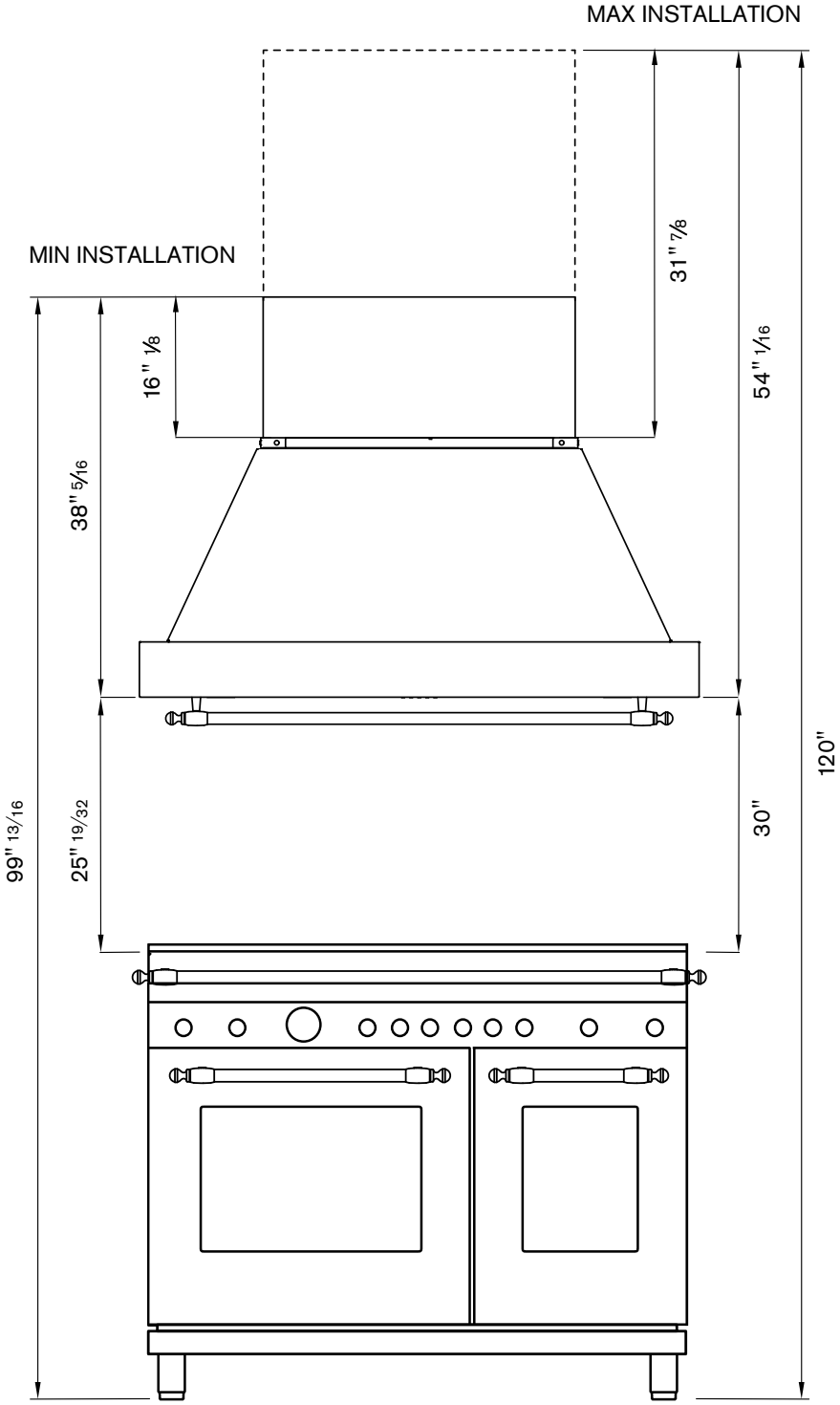
MAX INSTALLATION
MIN INSTALLATION
31" 7/8
54" 1/16
120"
16" 1/8
38" 5/16
99" 13/16
25" 19/32
30"