Product Dimensions

Large Capacity Washing Machine
Angled control
W1113

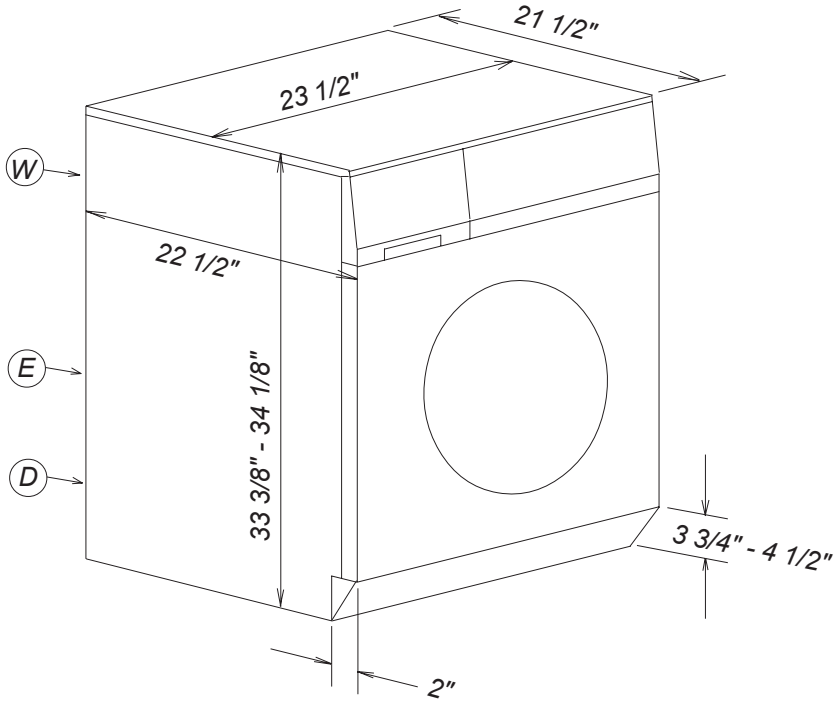

Location Codes	
D -	5 foot flexible drain hose connects lower left rear.
E -	208-240 Volt - 15 Amp 5 foot 4-wire (2 live / neutral / ground) molded plug power supply connects lower right rear (NEMA 14-30 Configuration).
W -	5 foot separate flexible hot and cold water intake hoses connect upper right and left rear.

Notes

- ***All installations must be done in accordance with local codes***
- *See "Cut-out Dimensions" sheet for undercounter or built-in space requirements*
- *Optional Easy Installation Kits utilize existing 208-240 Volt - 30 Amp line to connect two Miele machines without rewiring.*
- ***Remove transport struts in rear of machine before installation.***

NOTE: Drawing is not to scale.
SPECIFICATION SHEETS 010504

Product Dimensions

Large Capacity Washing Machines
Flat controls - Decor Unit
W1119

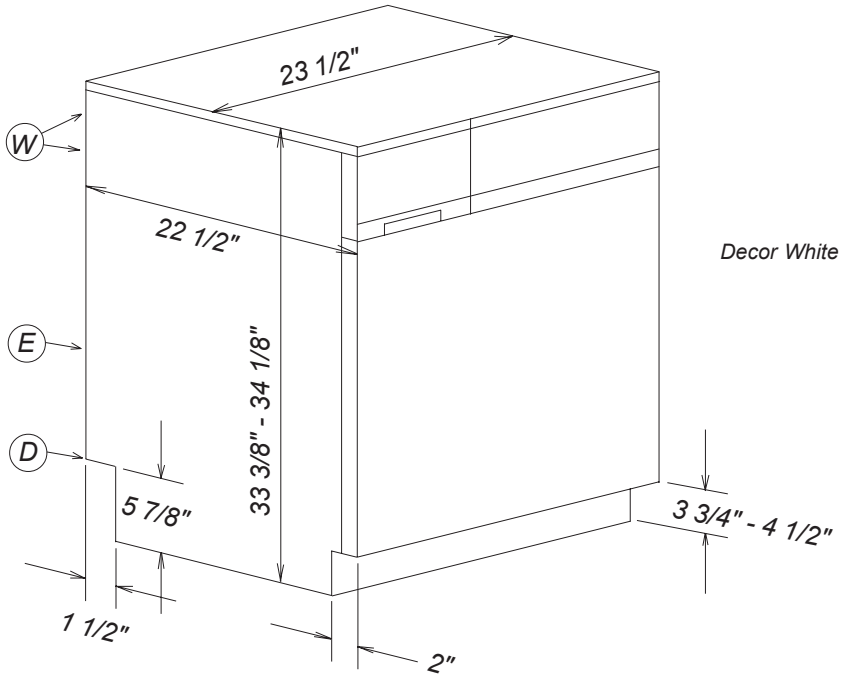

Location Codes	
D -	5 foot flexible drain hose connects lower left rear.
E -	208-240 Volt - 15 Amp 5 foot 4-wire (2 live / neutral / ground) molded plug power supply connects lower right rear (NEMA 14-30 Configuration).
W -	5 foot separate flexible hot and cold water intake hoses connect upper right and left rear.

Notes

- ***All installations must be done in accordance with local codes***
- *See "Cut-out Dimensions" sheet for undercounter or built-in space requirements*
- *Optional Easy Installation Kits utilize existing 208-240 Volt - 30 Amp line to connect two Miele machines without rewiring.*
- ***Remove transport struts in rear of machine before installation.***

NOTE: Drawing is not to scale.
SPECIFICATION SHEETS 010504

Cut-out Dimensions

Built-in Installations
Large Capacity Laundry Products

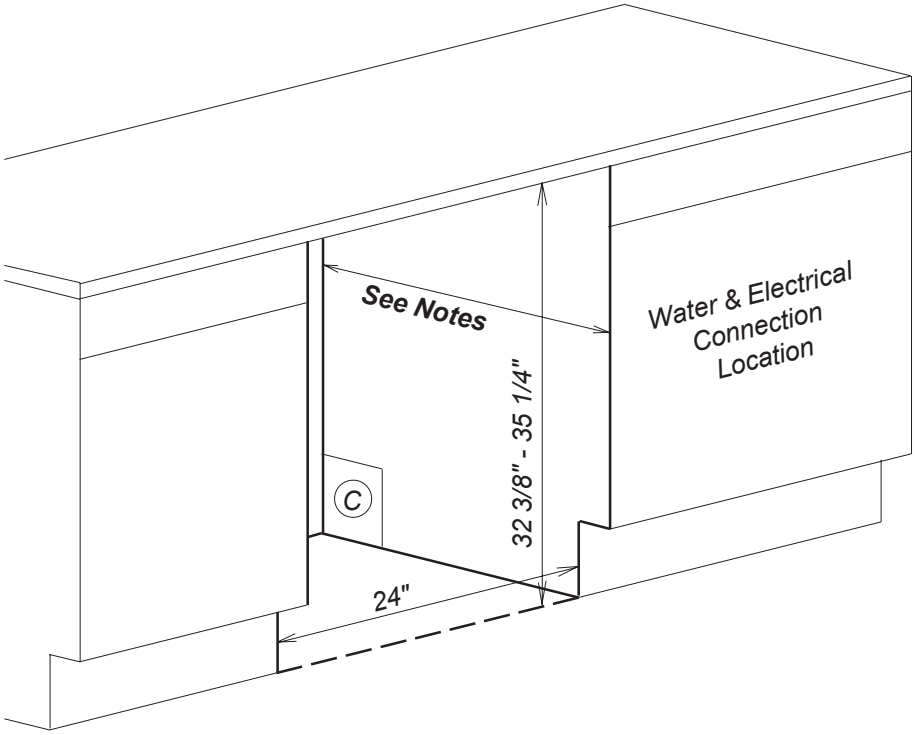

Location Codes	
C -	Cutout for Electric and Vent or Drain pass-through. Adjust according to duct or drain location.

Notes

- Needed depth will vary by model number:
  W1113: 24" minimum
  W1119: 25" minimum
- Typically requires removal of unit's lid. Out of box unit height dimension without lid is 32 5/16" - 32 11/16".
- Additional height for under counter installation may be attained by using UBS Spacer Frame (#01542631).

NOTE: Drawing is not to scale.

Product Dimensions

Easy Installation Kits
057B / 060B

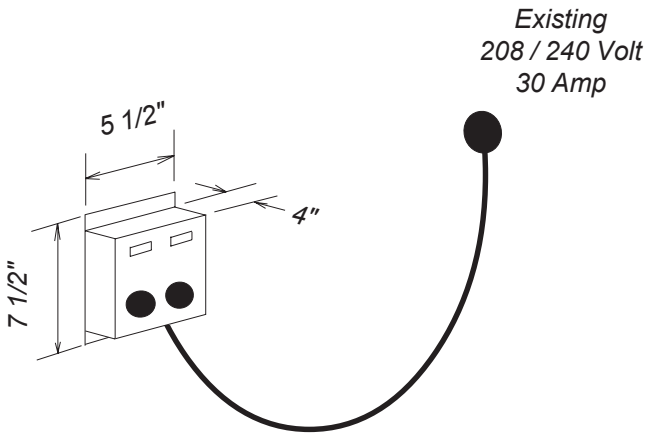

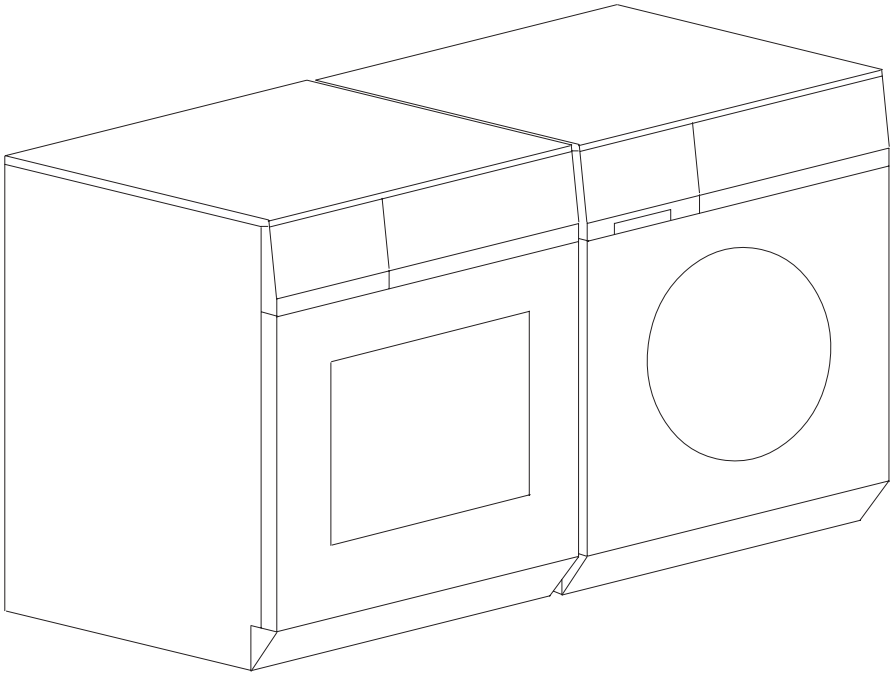

Notes
• ***Connect Washer and Dryer to Easy Installation Kit*** • ***All installations must be done in accordnace with local codes*** • ***057B Kit fitted with a NEMA10-30 Plug*** • ***060B Kit fitted with a NEMA14-30 Plug***

NOTE: Drawing is not to scale.
SPECIFICATION SHEETS 010504

Product Dimensions

Laundry Stand
WTS420 - White Only

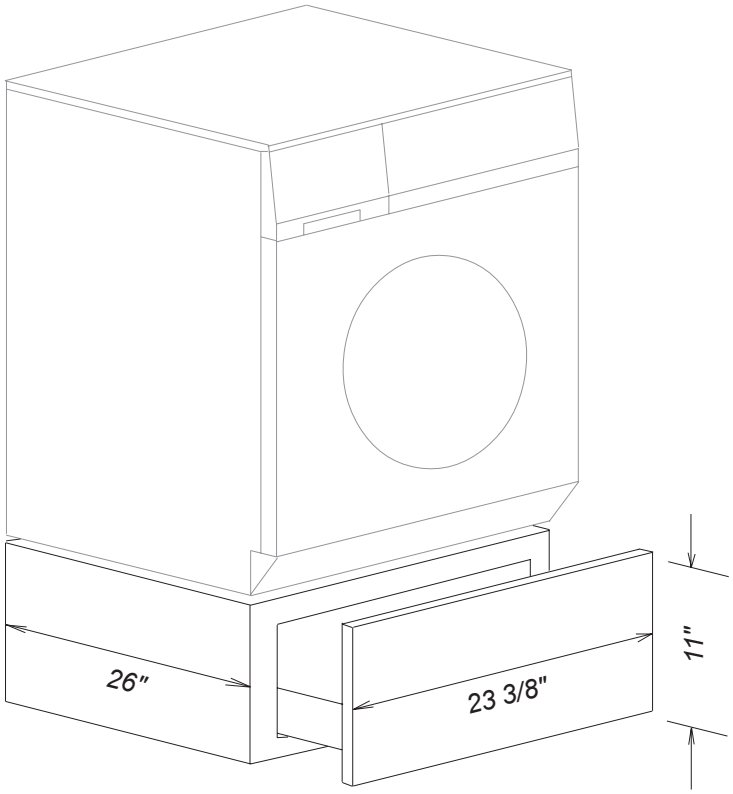

Notes
• ***For use with both large and super capacity washers or tumble dryers.***   • ***All installations must be done in accordnace with local codes***

NOTE: Drawing is not to scale.
SPECIFICATION SHEETS 010504

Product Dimensions

Stacked Washer & Dryer
Example Combination
W1113 + T1302

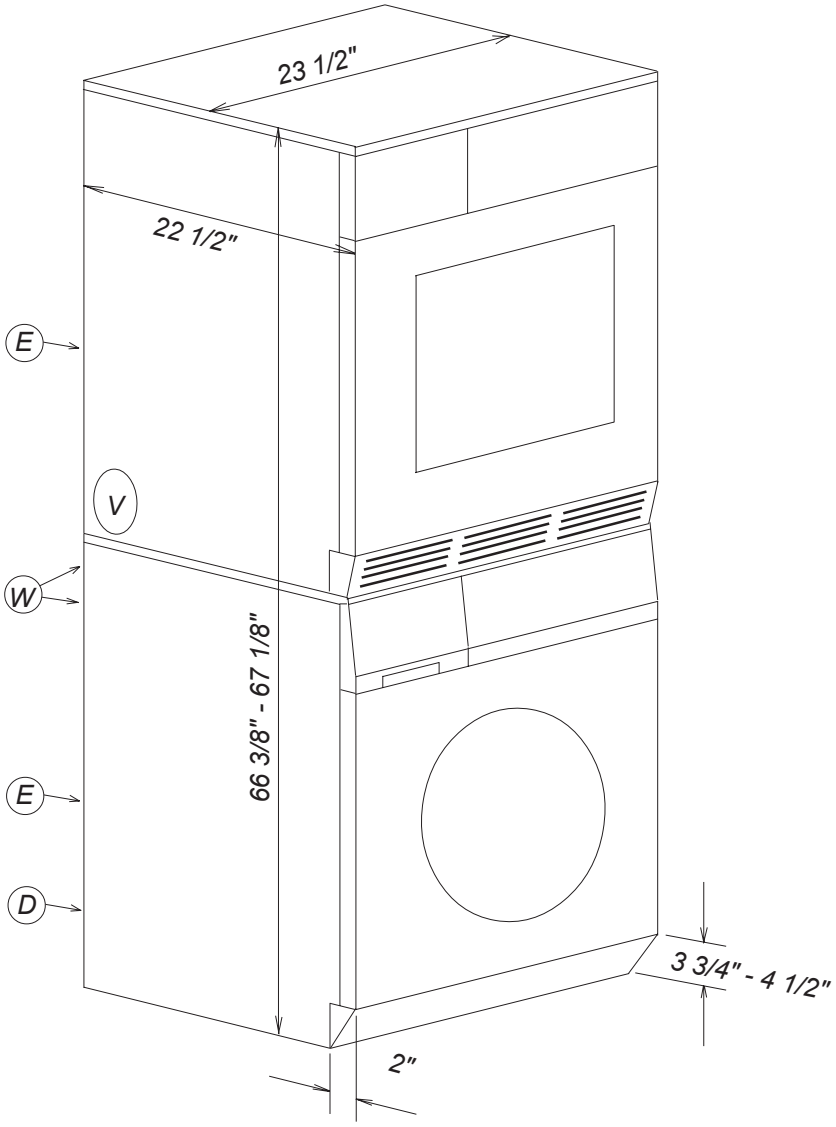

Location Codes	
D -	5 foot flexible drain hose connects lower left rear.
E -	5 foot - 208-240 Volt - 15 Amp 4-wire (2 live / neutral / ground) molded plug power supply connects lower right rear.
W -	5 foot separate flexible hot and cold water intake hoses connect upper right and left rear.

Notes

- ***All installations must be done in accordance with local codes***
- *See "Cut-out Dimensions" sheet for undercounter or built-in space requirements*
- *Optional Easy Installation Kits utilize existing 208-240 Volt - 30 Amp line to connect two Miele machines without rewiring .*
- ***Remove transport struts in rear of machine before installation.***

NOTE: Drawing is not to scale.
SPECIFICATION SHEETS 010504

Panel Information

Integrated Laundry
W1119 Decor Unit

These units come equipped with a full size white front panel. These units are also designed to either accept a thin insert or a custom front panel supplied by the custom cabinet maker.

Sizes are as follows:

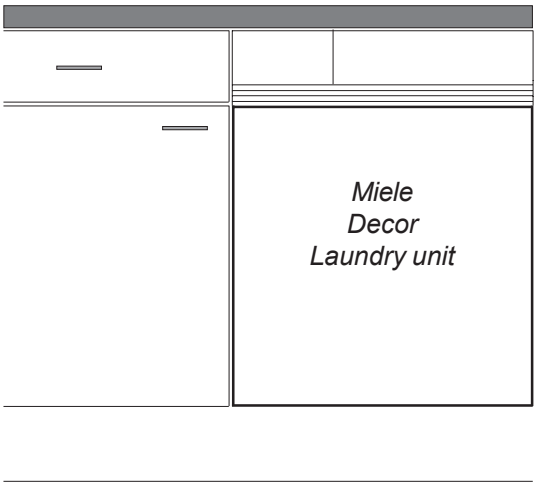

Version 1 - Thin insert

Width:	*23 1/4" for all machines*
Thickness:	*up to 1/8"*
Height:	*25" in all cases*

With this version, a thin white frame will be exposed after installation

Version 2 - Custom Front Panel

Width:	*23 3/8" for all machines*
Thickness:	*up to 3/4"*
Height:	*Up to 25"*

With this version, the existing front panel is removed and replaced by the new custom panel

Hinge Notches

In certain installations, notches will be required to accomodate the hinges in the front panel.

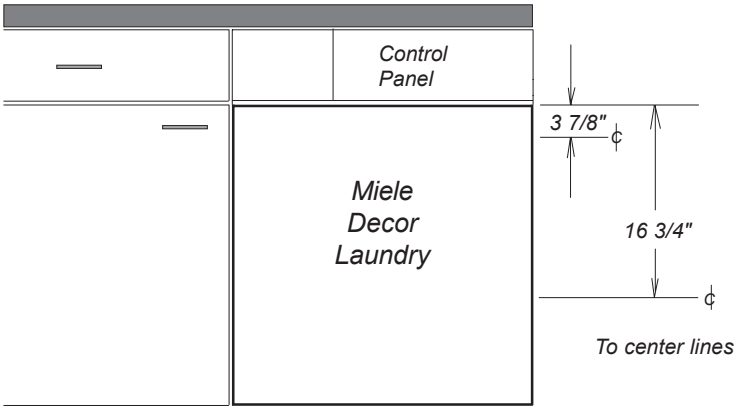

Note: *To insure access to customer servicable features, a minimum 4" toe kick above finished floor (AFF) is required.*

Notch Pattern

For this installation, drill the following pattern in the appropriate locations.

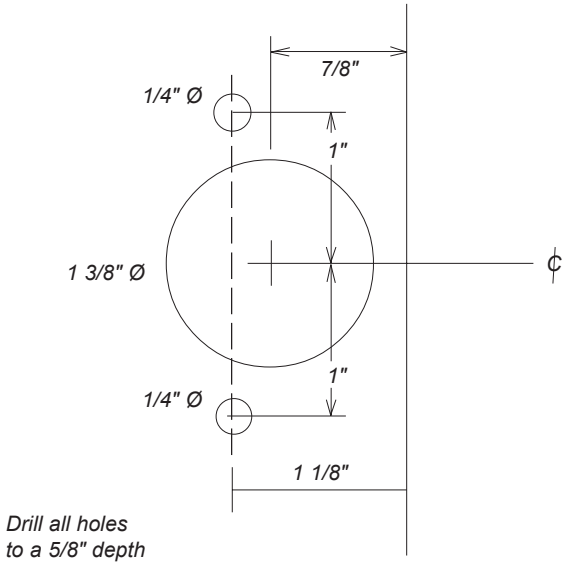

NOTE: Drawing is not to scale.